CITY OF WILLMAR, MINNESOTA
REQUEST FOR COMMITTEE ACTION

Agenda Item Number: 4

Meeting Date: February 24, 2015

Attachments: ☒ Yes No

CITY COUNCIL ACTION

Date: March 2, 2015

☐ Approved ☐ Denied
☐ Amended ☐ Tabled
☐ Other

Originating Department: Fire Department

Agenda Item: Acceptance of lease agreement between Midwest Wireless Communications L.L.C. d/b/a Verizon Wireless and the City of Willmar for the installation and maintenance of a communication antenna facility and related incidental equipment.

Recommended Action: Accept the proposed lease agreement between Midwest Wireless Communications L.L.C. d/b/a Verizon Wireless and the City of Willmar for the annual rent of fifteen thousand dollars ($15,000.00); initial lease term shall be for five (5) years.

Background/Summary: Approximately a year ago the City of Willmar was approached by Midwest Wireless Communications L.L.C. d/b/a Verizon Wireless to inquire if the city would be interested in erecting a monopole cell tower on the site of the fire departments existing communications tower to improve Verizon cellular customers coverage. The existing fire department emergency communications tower will be replaced by Verizon's monopole and Verizon shall make available to police, fire and other emergency services space on Verizon communications tower for existing equipment at no charge to the city. Additionally Verizon shall construct the tower and install the equipment without charge to the city along with making a reasonable effort to accommodate any new future emergency communications equipment provided by the city if there was a need.

Alternatives: Not accept the lease agreement between Midwest Wireless Communications L.L.C. d/b/a Verizon Wireless and the City of Willmar and forego the annual rent of fifteen thousand dollars ($15,000.00).

Financial Considerations: By accepting this lease agreement with Verizon the city will generate an additional $15,000.00 in revenue for the general fund.

Preparer: Gary Hendrickson **Signature:** Gary H

Comments:

VICINITY MAP

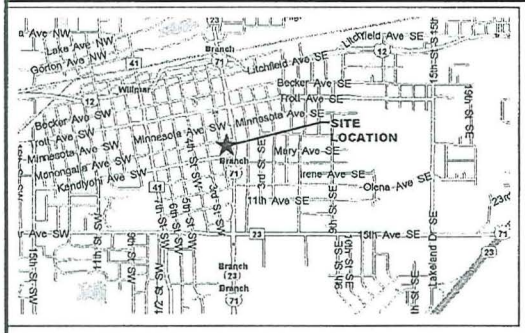

AERIAL VIEW

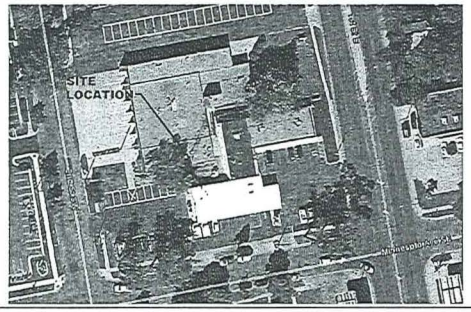

GENERAL LOCATION MAP

COUNTY: KANDIYOHI

verizon wireless

MN07 LEON WILLMAR
NEW SITE BUILD

DRIVING DIRECTIONS

FROM: BLOOMINGTON, MN SWITCH

HEAD WEST ON OLD SHAKOPEE RD, MERGE ONTO US-169 NORTH (4.6 MI), TAKE EXIT ONTO I-494W (9.7 MI), TAKE EXIT 19B TO US-12W (.3 MI), THEN CARLSON PARKWAY EXIT ON LEFT TOWARD LINNER RD. (.4 MI), MERGE ONTO US-12 VIA EXIT ON THE LEFT TOWARD WAYZATA (55.6 MI), TURN RIGHT ONTO ONTO US-12/ SIBLEY AVE N/ MN-22 (27.1 MI). CONTINUE TO FOLLOW US-12W (27.1 MI). TURN LEFT ONTO 2ND ST. SW. - 515 2ND ST. SW ON LEFT (.3 MI).

811 Know what's below. Call before you dig. www.call811.com

THE UTILITIES AS SHOWN ON THIS SET OF DRAWINGS WERE DEVELOPED FROM THE INFORMATION AVAILABLE. THE INFORMATION PROVIDED IS NOT IMPLIED NOR INTENDED TO BE THE COMPLETE INVENTORY OF UTILITIES IN THIS AREA. IT IS THE CONTRACTOR'S RESPONSIBILITY TO VERIFY THE LOCATION OF ALL UTILITIES (WHETHER SHOWN OR NOT) AND PROTECT SAID UTILITIES FROM ANY DAMAGE CAUSED BY CONTRACTOR'S ACTIVITIES.

SHEET INDEX

SHEET NUMBER	SHEET DESCRIPTION	RESPONSIBLE DISCIPLINE
T-1	TITLE SHEET	SC/E
	TOPOGRAPHIC SURVEY (BY OTHERS)	
A-1	OVERALL SITE PLAN	SC
A-2	ENLARGED SITE PLAN	SC
A-3	TOWER ELEVATION & ANTENNA LAYOUT	SC
A-4	ANTENNA KEY & GENERAL NOTES	SC
A-5	FOUNDATION PLAN & DETAILS	SC
A-6	SHELTER ELEVATIONS	SC
A-7	DETAILS (1 OF 2)	SC
A-8	DETAILS (2 OF 2)	SC
E-1	ELECTRICAL GENERAL	E
E-2	ELECTRICAL DETAILS	E
G-1	GROUNDING PLAN	E
G-2	GROUNDING RISER DIAGRAM	E
G-3	GROUNDING DETAILS (1 OF 2)	E
G-4	GROUNDING DETAILS (2 OF 2)	E
SP-1	SPECIFICATIONS (1 OF 7)	SC
SP-2	SPECIFICATIONS (2 OF 7)	SC
SP-3	SPECIFICATIONS (3 OF 7)	SC
SP-4	SPECIFICATIONS (4 OF 7)	SC
SP-5	SPECIFICATIONS (5 OF 7)	SC
SP-6	SPECIFICATIONS (6 OF 7)	E
SP-7	SPECIFICATIONS (7 OF 7)	E

VERIZON WIRELESS DEPT. APPROVALS

TITLE	NAME	DATE
RF ENGINEER		
OPERATIONS MANAGER		
CONSTRUCTION ENGINEER		
CONSTRUCTION MANAGER		
REAL ESTATE MANAGER		
LANDLORD		

PROJECT INFORMATION

SITE NAME:
MN07 LEON WILLMAR

ADDRESS:
515 2ND STREET SW
WILLMAR, MINNESOTA 56201

LATITUDE: (FROM 1A LETTER)
45° 07' 07.793" N (NAD 83)

LONGITUDE: (FROM 1A LETTER)
95° 02' 38.392" W (NAD 83)

GROUND ELEVATION:
1129.9' (NAVD 88)

ANTENNA TIP HEIGHT:
VARIES (SEE SHEET A-4)

ANTENNA RAD CENTER:
96'-0" A.G.L.

STRUCTURE HEIGHT:
100'-0" A.G.L.
MONOPOLE

OVERALL STRUCTURE HEIGHT:
108'-0" A.G.L.

YEAR TOWER BUILT:
TBD

PROJECT DESCRIPTION:
PROPOSED 100'-0" MONOPOLE WITH RELATED UNMANNED COMMUNICATION EQUIPMENT BELOW

TELCO PROVIDER:
CENTURYLINK

POWER PROVIDER:
WILLMAR MUNICIPAL UTILITIES
320-235-4422

LESSOR:
CITY OF WILLMAR
333-6TH ST. SW
WILLMAR, MINNESOTA 56201
CONTACT: MARK BOESCHEN
PHONE: (320) 235-4913
FAX: (320) 235-4917

SITE ACQUISITION:
VERIZON WIRELESS
10801 BUSH LAKE ROAD
BLOOMINGTON, MINNESOTA 55438
CONTACT: MIKE COGAR
PHONE: 952-946-4700
FAX: 952-946-2118

CONSTRUCTION ENGINEER:
VERIZON WIRELESS
10801 BUSH LAKE ROAD
BLOOMINGTON, MINNESOTA 55438
CONTACT: STEVE COLLIN
PHONE: (612) 720-0032

CONSULTING ENGINEER:
SSC, INC
9900 WEST 109TH STREET, SUITE 300
OVERLAND PARK, KANSAS 66210
M.L. OWENS - STRUCTURAL ENGINEER
T.M. SUPER - ELECTRICAL ENGINEER
M. SONKE - PROJECT MANAGER
D.D. SIMS - LEAD DESIGNER
PHONE: (913) 438-7700
FAX: (913) 438-7777

CODE COMPLIANCE:
UNINHABITED SHELTER
2009 INTERNATIONAL BUILDING CODE
2008 NATIONAL ELECTRICAL CODE
TIA/EIA-222-G OR LATEST EDITION
STRUCTURE CLASS II
TOPOGRAPHIC CATEGORY 1
EXPOSURE CATEGORY B

GENERATOR FUEL TYPE:
DIESEL

PLANS PREPARED FOR:

verizon wireless
10801 BUSH LAKE ROAD
BLOOMINGTON, MN 55438
PHONE: (952) 946-4700

PLANS PREPARED BY:

SSC
7803 Glenroy Road, Suite 102
Bloomington, Minnesota 55439
Phone: 952-831-0131
Fax: 913-438-7777

STRUCTURAL/CIVIL ENGINEER:

I hereby certify that this plan, specification, or report was prepared by me or under my direct supervision and that I am a duly Licensed Professional Engineer under the laws of the state of Minnesota.

Signature — MICHAEL L. OWENS, Typed or Printed name
Date: 12/15/14 — Reg. NO.: 44062
Pages or sheets covered by this certification: Per Responsible Discipline: STRUCTURAL/CIVIL SC

ELECTRICAL ENGINEER:

I hereby certify that this plan, specification, or report was prepared by me or under my direct supervision and that I am a duly Licensed Professional Engineer under the laws of the state of Minnesota.

Signature — SHELTON D. KEIGLING, Typed or Printed name
Date: 12-15-14 — Reg. NO.: 47767
Pages or sheets covered by this certification: Per Responsible Discipline: ELECTRICAL E

DRAWING NOTICE:

THIS DRAWING HAS NOT BEEN PUBLISHED AND IS THE SOLE PROPERTY OF SSC, INC. AND IS LENT TO THE BORROWER FOR THEIR CONFIDENTIAL USE ONLY, AND IN CONSIDERATION OF THE LOAN OF THIS DRAWING THE BORROWER PROMISES AND AGREES TO RETURN IT UPON REQUEST AND AGREES THAT IT WILL NOT BE REPRODUCED, COPIED, LENT OR OTHERWISE DISPOSED OF DIRECTLY OR INDIRECTLY, NOR USED FOR ANY PURPOSE OTHER THAN FOR WHICH IT IS FURNISHED.

SUBMITTALS

DESCRIPTION	DATE	BY	REV
ISSUED FOR REVIEW	09/27/13	DCS	A
ISSUED FOR REVIEW	12/09/13	JAB	B
ISSUED FOR REVIEW	12/17/13	PJW	C
ISSUED FOR CONSTRUCTION	09/12/14	PJW	D
REVISED SURVEY, FIBER EQUIPMENT	12/15/14	JAB	1

SITE NAME:
MN07 LEON WILLMAR

SITE NUMBER:
265819

SITE ADDRESS:
515 2ND STREET SW
WILLMAR, MINNESOTA
56201

SHEET DESCRIPTION:
TITLE SHEET

SSC #:

SHEET NUMBER:
T-1

SITE SURVEY

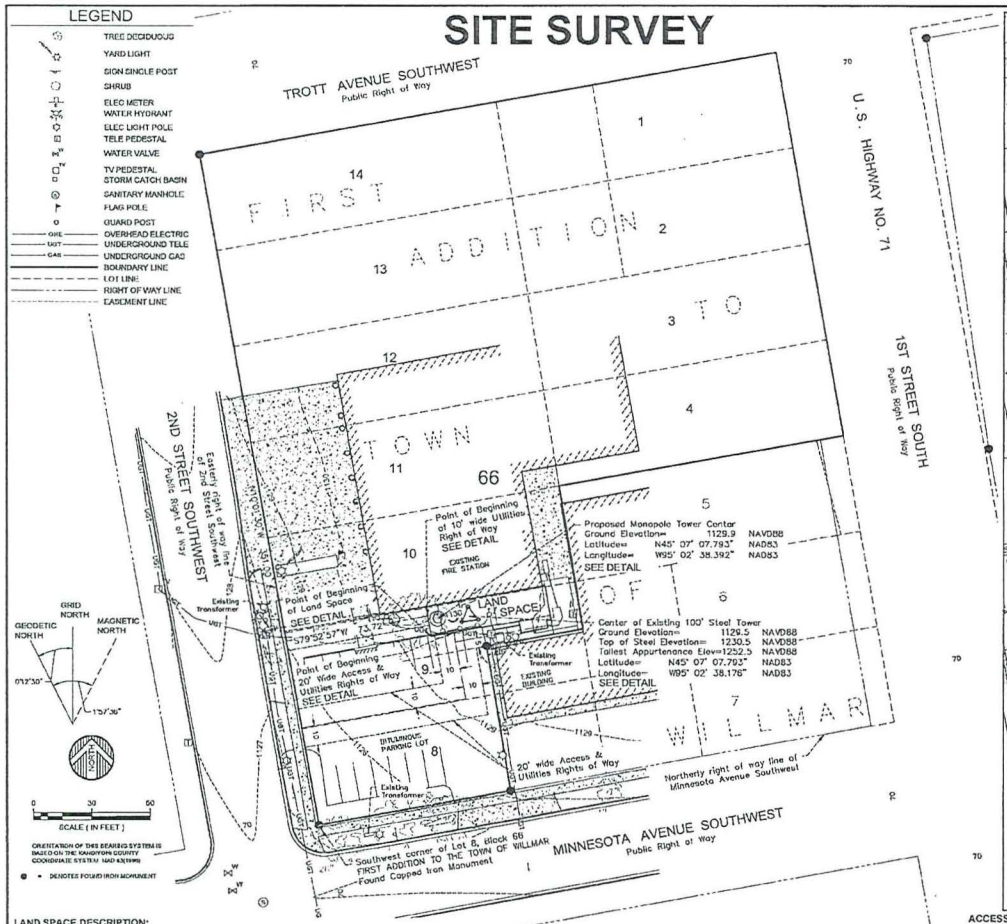

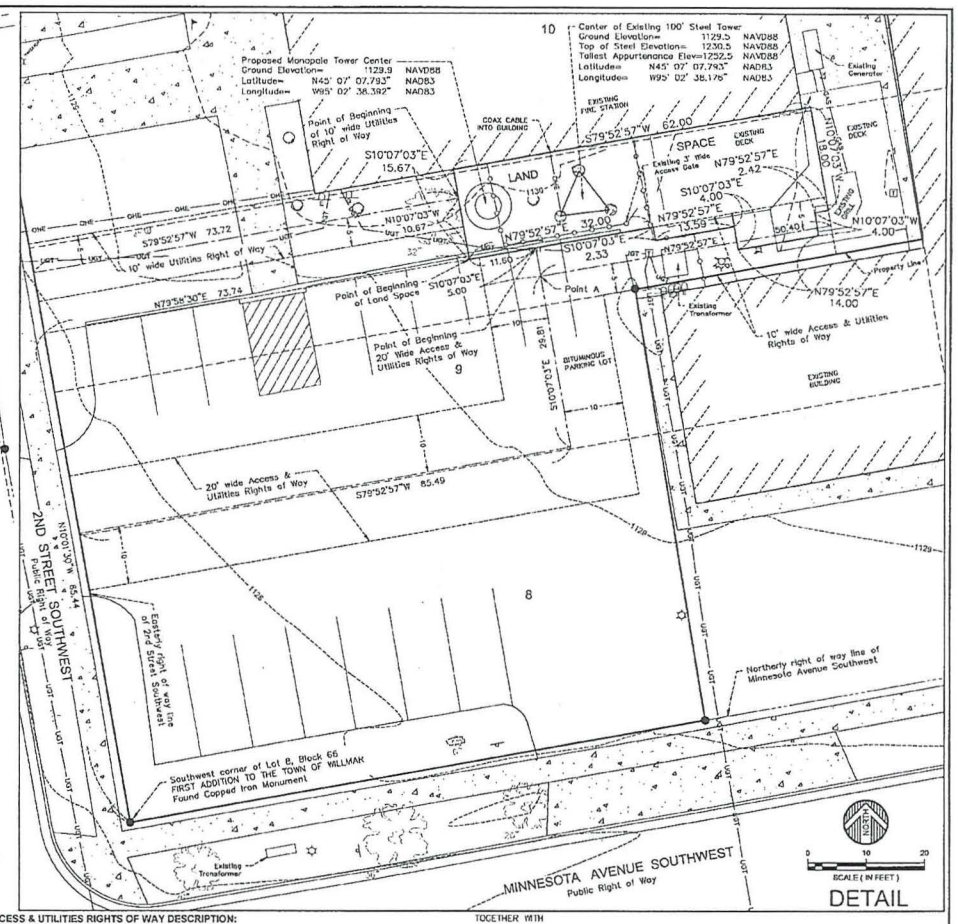

LAND SPACE DESCRIPTION:

That part of Lots 9 and 10, Block 66, FIRST ADDITION TO TOWN OF WILLMAR, according to the recorded plat thereof, Kandiyohi County, Minnesota, described as follows:

Commencing at the southwest corner of Lot 8 said Block 66; thence North 10 degrees 01 minutes 30 seconds West along the easterly right of way line of 2nd Street Southwest, a distance of 85.44 feet; thence North 79 degrees 58 minutes 30 seconds East, a distance of 73.74 feet to the Point of Beginning of the land space to be described; thence North 79 degrees 52 minutes 57 seconds East, a distance of 32.00 feet; thence South 10 degrees 07 minutes 03 seconds East, a distance of 2.33 feet; thence North 79 degrees 52 minutes 57 seconds East, a distance of 13.59 feet; thence South 10 degrees 07 minutes 03 seconds East, a distance of 4.00 feet; thence North 79 degrees 52 minutes 57 seconds East, a distance of 14.00 feet; thence North 10 degrees 07 minutes 03 seconds West, a distance of 4.00 feet; thence North 79 degrees 52 minutes 57 seconds East, a distance of 2.42 feet; thence North 10 degrees 07 minutes 03 seconds West, a distance of 18.00 feet; thence South 79 degrees 52 minutes 57 seconds West, a distance of 62.00 feet; thence South 10 degrees 07 minutes 03 seconds East, a distance of 15.67 feet to the Point of Beginning.

UTILITIES RIGHT OF WAY DESCRIPTION:

A 10.00 wide right of way for utility purposes over, under and across Lots 9 and 10, Block 66, FIRST ADDITION TO TOWN OF WILLMAR, according to the recorded plat thereof, Kandiyohi County, Minnesota, the centerline of said right of way is described as follows:

Commencing at the southwest corner of Lot 8 said Block 66; thence North 10 degrees 01 minutes 30 seconds West along the easterly right of way line of 2nd Street Southwest, a distance of 85.44 feet; thence North 79 degrees 58 minutes 30 seconds East, a distance of 73.74 feet; thence North 10 degrees 07 minutes 03 seconds West, a distance of 10.67 feet to the Point of Beginning of the centerline to be described; thence South 79 degrees 52 minutes 57 seconds West, a distance of 73.72 feet to said easterly right of way line of 2nd Street Southwest and said centerline there terminating.

The sidelines of said right of way shall be shortened or lengthened to terminate at said easterly right of way line of 2nd Street Southwest.

ACCESS & UTILITIES RIGHTS OF WAY DESCRIPTION:

A 20.00 wide right of way for ingress, egress and utility purposes over, under and across Lots 8 and 9, Block 66, FIRST ADDITION TO TOWN OF WILLMAR, according to the recorded plat thereof, Kandiyohi County, Minnesota, the centerline of said right of way is described as follows:

Commencing at the southwest corner of Lot 8 said Block 66; thence North 10 degrees 01 minutes 30 seconds West along the easterly right of way line of 2nd Street Southwest, a distance of 85.44 feet; thence North 79 degrees 58 minutes 30 seconds East, a distance of 73.74 feet; thence North 79 degrees 52 minutes 57 seconds East, a distance of 11.60 feet to the Point of Beginning of the centerline to be described; thence South 10 degrees 07 minutes 03 seconds East, a distance of 5.00 feet to a point hereinafter referred to as Point "A"; thence continue South 10 degrees 07 minutes 03 seconds East, a distance of 29.81 feet; thence South 79 degrees 52 minutes 57 seconds West, a distance of 85.49 feet to said easterly right of way line of 2nd Street Southwest and said centerline there terminating.

The sidelines of said right of way shall be shortened or lengthened to terminate at said easterly right of way line of 2nd Street Southwest.

TOGETHER WITH

A 10.00 foot wide right of way for ingress, egress and utility purposes over, under and across said Lots 8 and 9, the centerline of said right of way is described as follows:

Beginning at previously described Point "A"; thence North 79 degrees 52 minutes 57 seconds East, a distance of 50.40 feet and said centerline there terminating.

PARENT PARCEL DESCRIPTION: (per U.S. Title Solutions File No. 48262-MN1405-5020, dated 5/30/14.)

Block 66, except Lots 5, 6, 7 and the East 50 feet of Lot 8 and except the east 50 feet of the S1/2 of Lot 9, First Addition to the City of Willmar.

SCHEDULE "B" EXCEPTIONS: (per U.S. Title Solutions File No. 48262-MN1405-5020, dated 5/30/14.)

8.) Map - First Addition to Town of Willmar
The Plat of FIRST ADDITION TO TOWN OF WILLMAR is as shown on the survey.

SURVEYOR NOTE:

1.) Utilities are per observed evidence and from markings per GOPHER STATE ONE CALL Locate Request Ticket No. 130251627, dated April 8th, 2013.

2.) The Proposed Land Space together with all Access & Utility Rights of Way are within the area described in the Property Description contained therein.

SSC

SITE NAME: MN07 LEON WILLMAR

Kandiyohi, MN

No.	Date	REVISIONS	By	CHK	APP'D
3	10/14/14	ADDED 10' WIDE UTILITIES RIGHT OF WAY	THD	GMK	BTB
2	8/20/14	REVISED LAND SPACE/ACCESS & UTILITY RIGHT OF WAY	SMK	BTB	BTB
1	6/11/14	UPDATED TITLE COMMITMENT	SMK	BTB	BTB

FIELD WORK: 4/12/13 CHECKED BY: BTB DRAWN BY: JMB/SMK/THD

I HEREBY CERTIFY THAT THIS DOCUMENT WAS PREPARED BY ME OR UNDER MY DIRECT SUPERVISION AND THAT I AM A DULY LICENSED LAND SURVEYOR UNDER THE LAWS OF THE STATE OF MINNESOTA

SIGNATURE: Bryan T. Balcome
BRYAN T. BALCOME, L.S.
DATE: 2/7/14 LICENSE # 42594

FULL SCALE ON 22"x34"
HALF SCALE ON 11"x17"

0464A0563.000

WIDSETH SMITH NOLTING

Engineering
Architecture
Surveying
Environmental

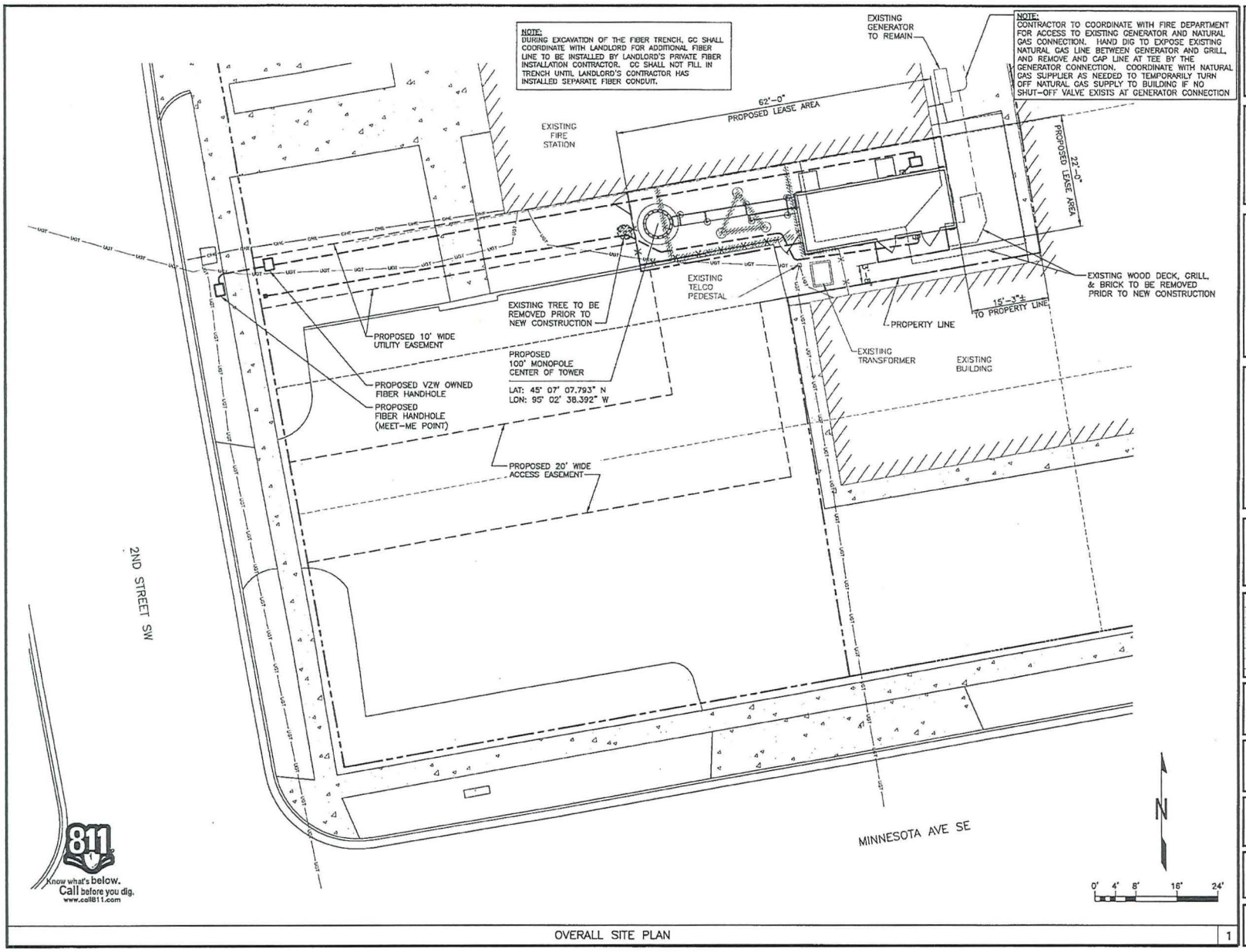

OVERALL SITE PLAN

1

PLANS PREPARED FOR:

verizon wireless
10801 BUSH LAKE ROAD
BLOOMINGTON, MN 55438
PHONE: (952) 946-4700

PLANS PREPARED BY:

SSC
7803 Glenroy Road, Suite 102
Bloomington, Minnesota 55439
Phone: 952-831-0131
Fax: 913-438-7777

STRUCTURAL/CIVIL ENGINEER:

I hereby certify that this plan, specification, or report was prepared by me or under my direct supervision and that I am a duly Licensed Professional Engineer under the laws of the state of Minnesota.

Signature — MICHAEL L. OWENS, Typed or Printed name

Date 12/15/14 — Reg. NO. 44652

Pages or sheets covered by this certification:
Per Responsible Discipline: STRUCTURAL/CIVIL SC

ELECTRICAL ENGINEER:

I hereby certify that this plan, specification, or report was prepared by me or under my direct supervision and that I am a duly Licensed Professional Engineer under the laws of the state of Minnesota.

Signature — SHELTON D. KEISLING, Typed or Printed name

Date — Reg. NO. 47757

Pages or sheets covered by this certification:
Per Responsible Discipline: ELECTRICAL E

DRAWING NOTICE:

THIS DRAWING HAS NOT BEEN PUBLISHED AND IS THE SOLE PROPERTY OF SSC, INC. AND IS LENT TO THE BORROWER FOR THEIR CONFIDENTIAL USE ONLY, AND IN CONSIDERATION OF THE LOAN OF THIS DRAWING, THE BORROWER PROMISES AND AGREES TO RETURN IT UPON REQUEST AND AGREES THAT IT WILL NOT BE REPRODUCED, COPIED, LENT OR OTHERWISE DISPOSED OF DIRECTLY OR INDIRECTLY, NOR USED FOR ANY PURPOSE OTHER THAN FOR WHICH IT IS FURNISHED.

SUBMITTALS

DESCRIPTION	DATE	BY	REV
ISSUED FOR REVIEW	09/27/13	DDS	A
ISSUED FOR REVIEW	12/09/13	JMB	B
ISSUED FOR REVIEW	12/17/13	PJW	C
ISSUED FOR CONSTRUCTION	09/12/14	PJW	0
REVISED SURVEY, FIBER EQUIPMENT	12/15/14	JMB	1

SITE NAME:

MN07 LEON WILLMAR

SITE NUMBER:

265819

SITE ADDRESS:

515 2ND STREET SW
WILLMAR, MINNESOTA
56201

SHEET DESCRIPTION:

OVERALL SITE PLAN

SSC #:

SHEET NUMBER:

A-1

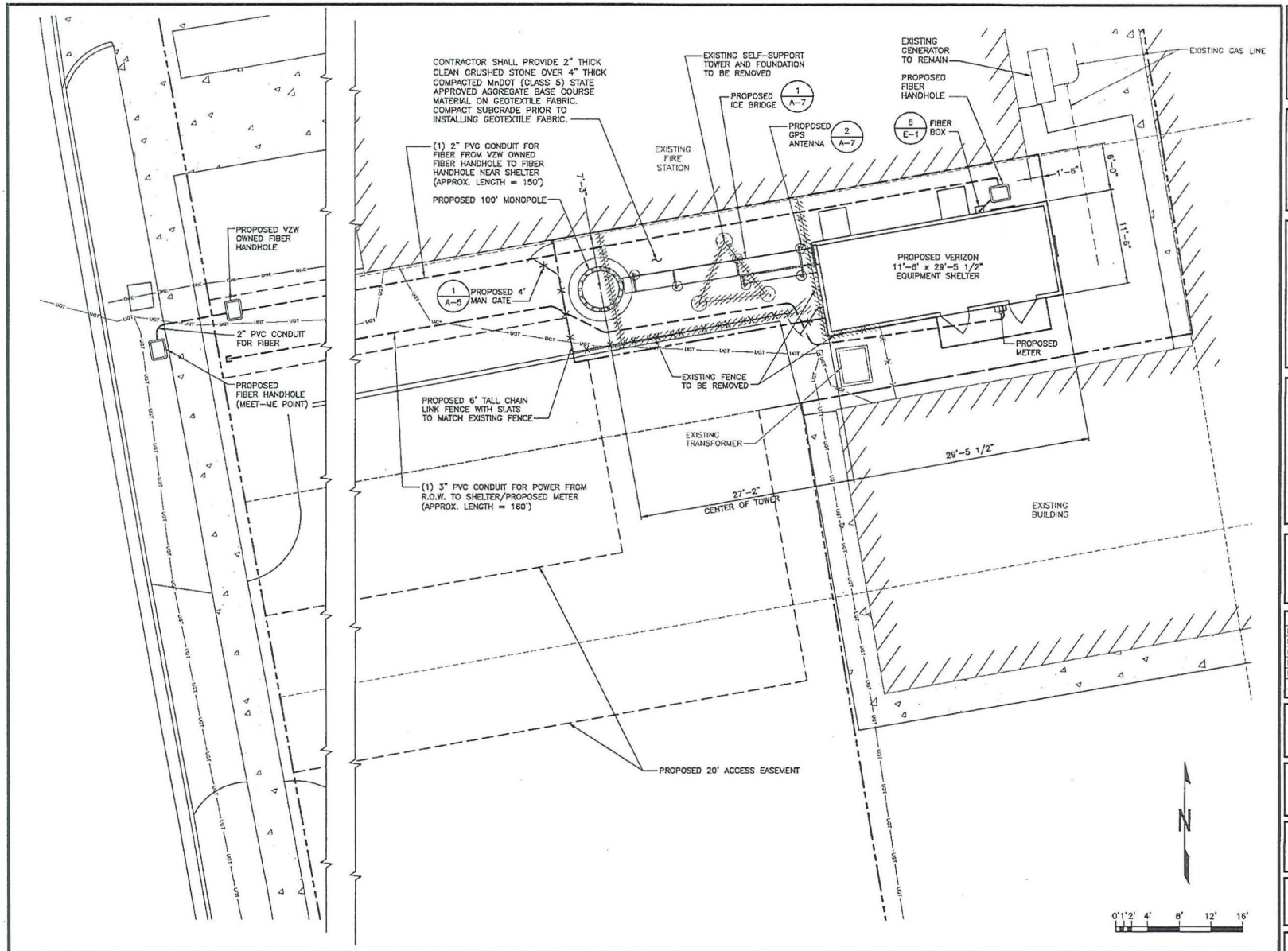

ENLARGED SITE PLAN

1

PLANS PREPARED FOR:

verizon wireless
10801 BUSH LAKE ROAD
BLOOMINGTON, MN 55438
PHONE: (952) 946-4700

PLANS PREPARED BY:

SSC
7803 Glenroy Road, Suite 102
Bloomington, Minnesota 55439
Phone: 952-831-0131
Fax: 913-438-7777

STRUCTURAL/CIVIL ENGINEER:

I hereby certify that this plan, specification, or report was prepared by me or under my direct supervision and that I am a duly Licensed Professional Engineer under the laws of the state of Minnesota.

Signature — MICHAEL L. OWENS, Typed or Printed name

Date 12/17/14 — 44052, Reg. NO.

Pages or sheets covered by this certification: Per Responsible Discipline: STRUCTURAL/CIVIL SC

ELECTRICAL ENGINEER:

I hereby certify that this plan, specification, or report was prepared by me or under my direct supervision and that I am a duly Licensed Professional Engineer under the laws of the state of Minnesota.

Signature — SHELTON D. KEISLING, Typed or Printed name

Date — 47767, Reg. NO.

Pages or sheets covered by this certification: Per Responsible Discipline: ELECTRICAL E

DRAWING NOTICE:

THIS DRAWING HAS NOT BEEN PUBLISHED AND IS THE SOLE PROPERTY OF SSC, INC. AND IS LENT TO THE BORROWER FOR THEIR CONFIDENTIAL USE ONLY, AND IN CONSIDERATION OF THE LOAN OF THIS DRAWING, THE BORROWER PROMISES AND AGREES TO RETURN IT UPON REQUEST AND AGREES THAT IT WILL NOT BE REPRODUCED, COPIED, LENT OR OTHERWISE DISPOSED OF DIRECTLY OR INDIRECTLY, NOR USED FOR ANY PURPOSE OTHER THAN FOR WHICH IT IS FURNISHED.

SUBMITTALS

DESCRIPTION	DATE	BY	REV
ISSUED FOR REVIEW	09/27/13	DGS	A
ISSUED FOR REVIEW	12/09/13	JMB	B
ISSUED FOR REVIEW	12/17/13	PJW	C
ISSUED FOR CONSTRUCTION	09/12/14	PJW	0
REVISED SURVEY, FIBER EQUIPMENT	12/15/14	JMB	1

SITE NAME:

MN07 LEON WILLMAR

SITE NUMBER:

265819

SITE ADDRESS:

515 2ND STREET SW
WILLMAR, MINNESOTA
56201

SHEET DESCRIPTION:

ENLARGED SITE PLAN

SSC #:

SHEET NUMBER:

A-2

NOTE:
CONTRACTOR SHALL NOTE THE HEIGHT OF DIRECTIONAL ANTENNA ON EXISTING SELF-SUPPORT TOWER PRIOR TO REMOVAL, AND INSTALL ON PROPOSED MONOPOLE AT SAME R.A.D.

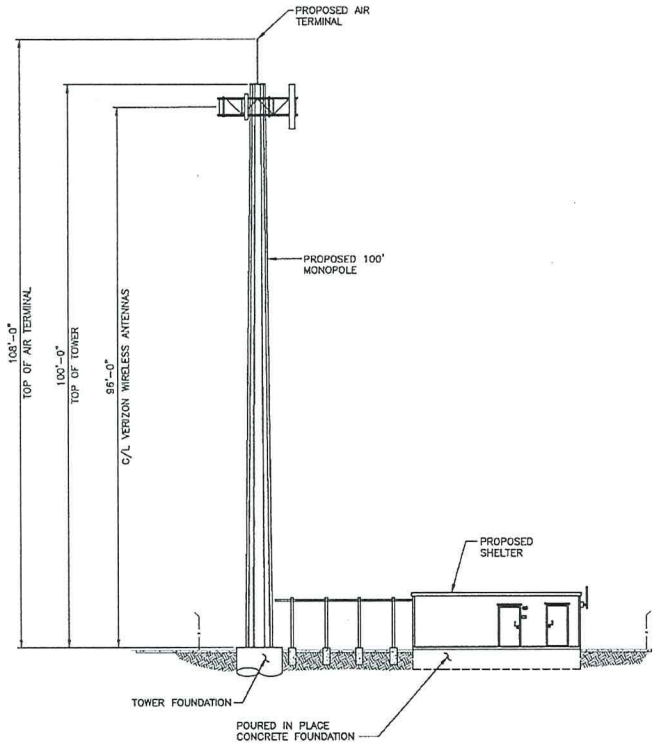

TOWER ELEVATION | 3

ALL TOWER INFORMATION SHOWN IS FOR ILLUSTRATIVE PURPOSES ONLY AND MAY DIFFER FROM THE FINAL DESIGN PROVIDED BY THE TOWER MANUFACTURER. THE CONTRACTOR SHALL CONSTRUCT THE TOWER, TOWER FOUNDATION, AND ALL OTHER RELATED COMPONENTS IN ACCORDANCE WITH THE TOWER MANUFACTURE'S DRAWINGS AND SPECIFICATIONS. SSC TAKES NO RESPONSIBILITY FOR THE STRUCTURAL INTEGRITY OF THE PROPOSED TOWER OR PROPOSED TOWER FOUNDATION.

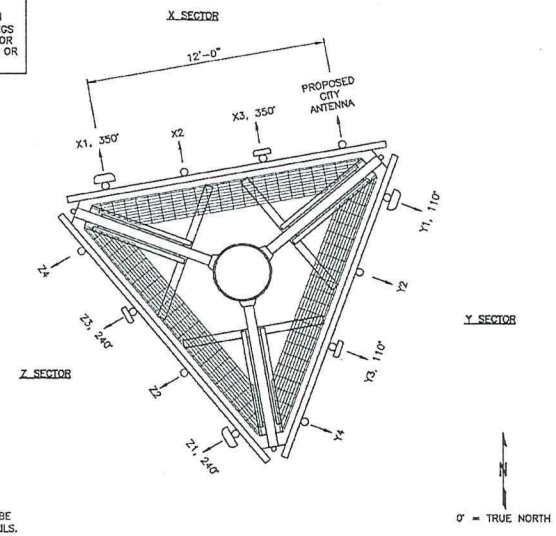

NOTE:
THE ANTENNA LAYOUT IS FOR ANTENNA ORIENTATION ONLY. ALL CONNECTIONS FOR HANGERS, SUPPORTS, BRACING, ETC., SHALL BE PER TOWER MANUFACTURER'S STANDARD DETAILS.

ANTENNA LAYOUT | 1

DETAIL NOT USED | 2

PLANS PREPARED FOR:

verizon wireless
10801 BUSH LAKE ROAD
BLOOMINGTON, MN 55438
PHONE: (952) 946-4700

PLANS PREPARED BY:

7803 Glenroy Road, Suite 102
Bloomington, Minnesota 55439
Phone: 952-831-0131
Fax: 913-438-7777
SSC

STRUCTURAL/CIVIL ENGINEER:

I hereby certify that this plan, specification, or report was prepared by me or under my direct supervision and that I am a duly Licensed Professional Engineer under the laws of the state of Minnesota.

Signature: MICHAEL L. OWENS
Typed or Printed name
Date: 12/15/14 Reg. NO.: 44062
Pages or sheets covered by this certification:
Per Responsible Discipline: STRUCTURAL/CIVIL SC

ELECTRICAL ENGINEER:

I hereby certify that this plan, specification, or report was prepared by me or under my direct supervision and that I am a duly Licensed Professional Engineer under the laws of the state of Minnesota.

Signature: SHELTON D. KEIBLING
Typed or Printed name
Date: Reg. NO.: 47757
Pages or sheets covered by this certification:
Per Responsible Discipline: ELECTRICAL E

DRAWING NOTICE:

THIS DRAWING HAS NOT BEEN PUBLISHED AND IS THE SOLE PROPERTY OF SSC, INC. AND IS LENT TO THE BORROWER FOR THEIR CONFIDENTIAL USE ONLY, AND IN CONSIDERATION OF THE LOAN OF THIS DRAWING, THE BORROWER PROMISES AND AGREES TO RETURN IT UPON REQUEST AND AGREES THAT IT WILL NOT BE REPRODUCED, COPIED, LENT OR OTHERWISE DISPOSED OF DIRECTLY OR INDIRECTLY, NOR USED FOR ANY PURPOSE OTHER THAN FOR WHICH IT IS FURNISHED.

SUBMITTALS

DESCRIPTION	DATE	BY	REV
ISSUED FOR REVIEW	09/27/13	DDS	A
ISSUED FOR REVIEW	12/09/13	JMB	B
ISSUED FOR REVIEW	12/17/13	PJW	C
ISSUED FOR CONSTRUCTION	09/12/14	PJW	0
REVISED SURVEY, FIBER EQUIPMENT	12/15/14	JMB	1

SITE NAME:
MN07 LEON WILLMAR

SITE NUMBER:
265819

SITE ADDRESS:
515 2ND STREET SW
WILLMAR, MINNESOTA
56201

SHEET DESCRIPTION:
TOWER ELEVATION
& ANTENNA LAYOUT

SSC #:

SHEET NUMBER:
A-3

PROPOSED ANTENNA KEY

	AZIMUTH	POSITION	FUNCTION	QTY	MANUFACTURER	MODEL	MOD TYPE	ANTENNA LENGTH	ANTENNA TIP	ANTENNA CENTER	ELEC DOWNTILT	MECH DOWNTILT	STATUS
"X" SECTOR	350°	1.1	TX0/RX0	1	ANDREW	LNX-6515DS-VTM	LTE	96.4"	100'	96'	3°	–	PROPOSED
		1.2	TX1/RX1										
	–	2.1	–	–	–	–	–	–	–	–	–	–	–
		2.2	–										
	350°	3.1	TX/RX0	1	ANTEL	WBX065X16M050	AWS	41"	97'-8"	96'	3°	–	PROPOSED
		3.2	TX/RX1										
	CITY ANTENNA	–	–	–	–	*SEE EQUIPMENT KEY BELOW	–	–	–	–	–	–	–
		–	–										
"Y" SECTOR	110°	1.1	TX0/RX0	1	ANDREW	LNX-6515DS-VTM	LTE	96.4"	100'	96'	5°	–	PROPOSED
		1.2	TX1/RX1										
	–	2.1	–	–	–	–	–	–	–	–	–	–	–
		2.2	–										
	110°	3.1	TX/RX0	1	ANTEL	WBX065X16M050	AWS	41"	97'-8"	96'	5°	–	PROPOSED
		3.2	TX/RX1										
	–	4.1	–	–	–	–	–	–	–	–	–	–	–
		4.2	–										
"Z" SECTOR	240°	1.1	TX0/RX0	1	ANDREW	LNX-6515DS-VTM	LTE	96.4"	100'	96'	5°	–	PROPOSED
		1.2	TX1/RX1										
	–	2.1	–	–	–	–	–	–	–	–	–	–	–
		2.2	–										
	240°	3.1	TX/RX0	1	ANTEL	WBX065X16M050	AWS	41"	97'-8"	96'	5°	–	PROPOSED
		3.2	TX/RX1										
	–	4.1	–	–	–	–	–	–	–	–	–	–	–
		4.2	–										

PROPOSED COAX KEY

QTY.	COAX TYPE	MANUFACTURER	MODEL	DIELECTRIC	DIAMETER (INCH)	RUN (FEET)	STATUS
1	MAIN	ANDREW	AVA7-50	FOAM	1 5/8"	120'	PROPOSED
1	MAIN	ANDREW	AVA7-50	FOAM	1 5/8"	120'	PROPOSED
–	–	–	–	–	–	–	–
1	MAIN	ANDREW	AVA7-50	FOAM	1 5/8"	120'	PROPOSED
1	MAIN	ANDREW	AVA7-50	FOAM	1 5/8"	120'	PROPOSED
–	–	–	–	–	–	–	–
1	MAIN	ANDREW	AVA7-50	FOAM	1 5/8"	120'	PROPOSED
1	MAIN	ANDREW	AVA7-50	FOAM	1 5/8"	120'	PROPOSED
–	–	–	–	–	–	–	–
1	MAIN	ANDREW	AVA7-50	FOAM	1 5/8"	120'	PROPOSED
1	MAIN	ANDREW	AVA7-50	FOAM	1 5/8"	120'	PROPOSED
–	–	–	–	–	–	–	–
1	MAIN	ANDREW	AVA7-50	FOAM	1 5/8"	120'	PROPOSED
1	MAIN	ANDREW	AVA7-50	FOAM	1 5/8"	120'	PROPOSED
–	–	–	–	–	–	–	–
1	MAIN	ANDREW	AVA7-50	FOAM	1 5/8"	120'	PROPOSED
1	MAIN	ANDREW	AVA7-50	FOAM	1 5/8"	120'	PROPOSED
–	–	–	–	–	–	–	–

PROPOSED TTA KEY

QTY.	MODEL	STATUS
–	–	–
–	–	–
–	–	–
–	–	–
–	–	–
–	–	–
–	–	–
–	–	–
–	–	–
–	–	–
–	–	–
–	–	–
–	–	–
–	–	–
–	–	–
–	–	–
–	–	–
–	–	–
–	–	–
–	–	–
–	–	–
–	–	–

*PROPOSED EQUIPMENT KEY (TO BE INSTALLED BY LANDLORD'S CONTRACTOR)

QTY.	EQUIPMENT TYPE	MODEL	STATUS
1	VHF 5.25 Db GAIN ANTENNA	220-3BN	PROPOSED
1	VHF 6 Db GAIN INVERTABLE ANTENNA	DB-224-A	PROPOSED
300	1/2" TRANSMISSION LINE WITH 4 N FEMALE CONNECTORS	LDFA-50A	PROPOSED
4	SNAP ON GROUNDING KIT WITH FIELD INSTALLED 2-HOLE LUG, 48" BONDING CONDUCTOR	SG12-12B2U	PROPOSED
2	1/2" HOISTING GRIP	L4SGRIP	PROPOSED
7	KIT OF 10 SNAP STACK 1/2" COAX HANGERS	SSH-12-4	PROPOSED

PROPOSED ANTENNA JUMPER KEY

12	JUMPERS	ANDREW	LDF4-50A	FOAM	1/2"	10'	PROPOSED

NOTES:

1. ANTENNAS SHALL BE DESIGNATED FROM RIGHT TO LEFT, FACING THE ASSEMBLY FROM THE GROUND. LEFT TO RIGHT FACING THE BACK OF THE ANTENNA.
2. THE OUTER MOST ANTENNAS ON EACH FACE SHALL BE DESIGNATED AS THE RECEIVE ANTENNAS. THE INNER ANTENNAS SHALL BE DESIGNATED AS THE TRANSMIT ANTENNAS.
3. EACH TRANSMISSION LINE SHALL BE LABELED WITH BRASS "TOE TAGS", GRAINGER PART NUMBER 1F035-8, STAMPED WITH 1/4" LETTERS/NUMBERS STAMPS, GRAINGER PART NUMBER 3W639. THE LABELS SHALL BE ATTACHED WITH A SEMIPERMANENT METHOD (I.E. BLACK UV RESISTANT CABLE TIES). THE TAGS SHALL BE PLACED SO AS NOT TO COME IN CONTACT WITH THE CONNECTOR ON THE LINE AND THE METAL OF THE TOWER. LINES SHALL BE LABELED AT THE TOP, BOTTOM AT ENTRY PORT.
4. EACH LINE SHALL ALSO BE LABELED AT THE LIGHTNING/SURGE PROTECTOR MOUNTING PLATE WITH A PRINTABLE LABEL MAKER TO INDICATE LINE NUMBER AND FUNCTION, THE SAME AS THE TOE TAG.
5. THE TAG LABELING SHALL BE AS DESIGNATED IN THE ANTENNA KEY.
6. IN TWO-ANTENNA CONFIGURATION WHERE ONE ANTENNA WILL BE DUPLEXED, THE DUPLEXED ANTENNA SHALL BE LABELED AS RECEIVE.
7. CONTRACTOR SHALL FIELD VERIFY THE EXACT TMA'S (IF THEY ARE REQUIRED) PER THE OPERATIONS MANAGER.
8. COAXIAL FEEDER LENGTHS INDICATED ABOVE ARE APPROXIMATE. CONTRACTOR TO VERIFY ACTUAL LENGTH BEFORE ORDERING.
9. CONTRACTOR SHALL INSTALL PLATFORM OR MOUNTING BRACKETS AND HARDWARE FOR ALL ANTENNAS AND SHALL BE PER THE TOWER MANUFACTURERS STANDARD DETAILS OR APPROVED EQUAL.
10. CONTRACTOR TO FURNISH AND INSTALL AN EXIT PORT (IF ONE IS NOT EXISTING) IN ACCORDANCE WITH THE TOWER MANUFACTURER'S SPECIFICATIONS AND UPON THE TOWER OWNER'S APPROVAL. (TYP. AT PLATFORM AND AT BOTTOM).

EQUIPMENT

EQUIPMENT FURNISHED AND/OR INSTALLED BY:

DESCRIPTION	FURNISHED	INSTALLED	DESCRIPTION	FURNISED	INSTALLED
SHELTER	VERIZON	CONTRACTOR	GRASS SEED AND FERTILIZER	CONTRACTOR	CONTRACTOR
ANTENNAS	VERIZON	CONTRACTOR	CONCRETE	CONTRACTOR	CONTRACTOR
ANTENNA MOUNTING PIPES	VERIZON	CONTRACTOR			
ANTENNA MOUNTING BRACKETS	VERIZON	CONTRACTOR			
ANTENNA PLATFORM	VERIZON	CONTRACTOR	CULVERT	CONTRACTOR	CONTRACTOR
GENERATOR EXHAUST & LOUVERS	VERIZON	CONTRACTOR	COAX LADDER	VERIZON	CONTRACTOR
LIGHTNING ROD	VERIZON	CONTRACTOR	SHELTER TIE DOWNS	VERIZON	CONTRACTOR
TOWER & ANCHOR BOLTS	VERIZON	CONTRACTOR	FCC SIGNS	CONTRACTOR	CONTRACTOR
ICE BRIDGE	VERIZON	CONTRACTOR	PPC TYPE CONNECTORS	CONTRACTOR	CONTRACTOR
SURGE PROTECTION UNIT	VERIZON	CONTRACTOR	GPS ANTENNA	VERIZON	CONTRACTOR
JUMPERS	CONTRACTOR	CONTRACTOR	GPS SURGE ARRESTER	VERIZON	CONTRACTOR
CONDUIT, WIRING, & GROUNDING	CONTRACTOR	CONTRACTOR	PPC STYLE CLOSURES	CONTRACTOR	CONTRACTOR
FENCING, GATES, & LATCH	CONTRACTOR	CONTRACTOR			
CRUSHED ROCK	CONTRACTOR	CONTRACTOR			
CONCRETE FILLED STEEL BOLLARDS	CONTRACTOR	CONTRACTOR			
EROSION CONTROL FABRIC	CONTRACTOR	CONTRACTOR			

PLANS PREPARED FOR:

verizon wireless
10801 BUSH LAKE ROAD
BLOOMINGTON, MN 55438
PHONE: (952) 946-4700

PLANS PREPARED BY:

7803 Glenroy Road, Suite 102
Bloomington, Minnesota 55439
Phone: 952-831-0131
Fax: 913-438-7777
SSC

STRUCTURAL/CIVIL ENGINEER:

I hereby certify that this plan, specification, or report was prepared by me or under my direct supervision and that I am a duly Licensed Professional Engineer under the laws of the state of Minnesota.

MICHAEL L. OWENS
Typed or Printed name
Signature
12/18/14
Date
4052
Reg. NO.
Pages or sheets covered by this certification:
Per Responsible Discipline: STRUCTURAL/CIVIL SE

ELECTRICAL ENGINEER:

I hereby certify that this plan, specification, or report was prepared by me or under my direct supervision and that I am a duly Licensed Professional Engineer under the laws of the state of Minnesota.

SHELTON D. KEISLING
Typed or Printed name
Signature
47757
Date
Reg. NO.
Pages or sheets covered by this certification:
Per Responsible Discipline: ELECTRICAL E

DRAWING NOTICE:

THIS DRAWING HAS NOT BEEN PUBLISHED AND IS THE SOLE PROPERTY OF SSC, INC. AND IS LENT TO THE BORROWER FOR THEIR CONFIDENTIAL USE ONLY, AND IN CONSIDERATION OF THE LOAN OF THIS DRAWING, THE BORROWER PROMISES AND AGREES TO RETURN IT UPON REQUEST AND AGREES THAT IT WILL NOT BE REPRODUCED, COPIED, LENT OR OTHERWISE DISPOSED OF DIRECTLY OR INDIRECTLY, NOR USED FOR ANY PURPOSE OTHER THAN FOR WHICH IT IS FURNISHED.

SUBMITTALS

DESCRIPTION	DATE	BY	REV
ISSUED FOR REVIEW	09/27/13	DGS	A
ISSUED FOR REVIEW	12/09/13	JMB	B
ISSUED FOR REVIEW	12/17/13	PJW	C
ISSUED FOR CONSTRUCTION	09/12/14	PJW	0
REVISED SURVEY, FIBER EQUIPMENT	12/15/14	JMB	1

SITE NAME:

MN07 LEON WILLMAR

SITE NUMBER:

265819

SITE ADDRESS:

515 2ND STREET SW
WILLMAR, MINNESOTA
56201

SHEET DESCRIPTION:

ANTENNA KEY
& GENERAL NOTES

SSC #:

SHEET NUMBER:

A-4

NOTE:
FOOTING ARE DESIGNED FOR AN ASSUMED ALLOWABLE BEARING CAPACITY OF 1000 PSF. THE CONTRACTOR IS REQUIRED TO VERIFY THE SOIL CAPACITY AND INFORM THE STRUCTURAL ENGINEER AS TO THE FINDINGS. IF THE BEARING CAPACITY IS BELOW 1000 PSF ADJUSTMENTS IN FOOTING SIZE MAY BE REQUIRED.

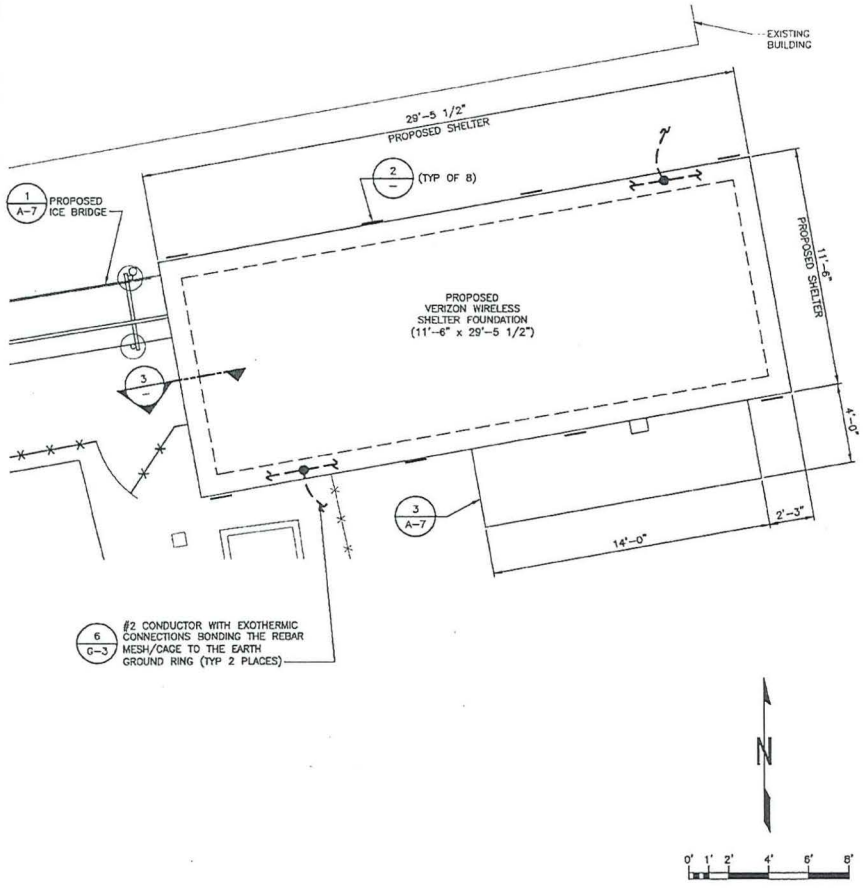

SHELTER FOUNDATION PLAN 4

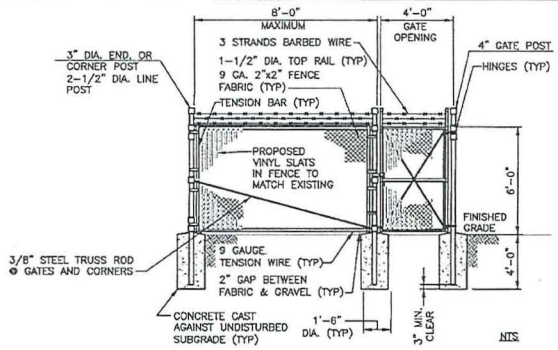

FENCE/GATE DETAIL 1

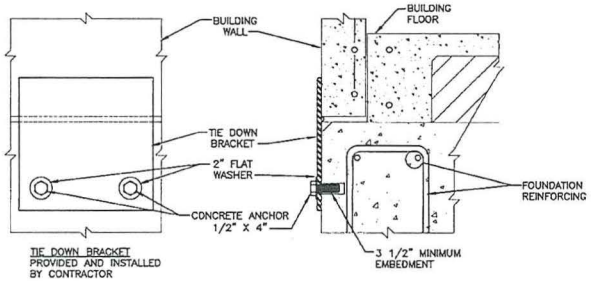

SHELTER TIE DOWN DETAIL 2

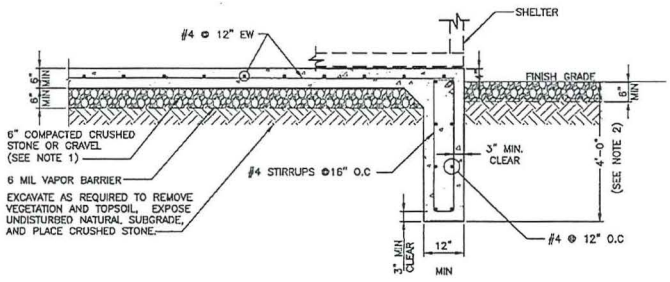

NOTES:
1. GRAVEL SHALL BE NATURAL OR CRUSHED GRAVEL WITH 100 PERCENT PASSING 1 INCH SIEVE.
2. BOTTOM OF FOUNDATION SHALL BE BELOW FROST LINE AND BEAR ON UNDISTURBED SOIL.

SHELTER FOUNDATION SECTION 3

PLANS PREPARED FOR:

verizon wireless
10801 BUSH LAKE ROAD
BLOOMINGTON, MN 55438
PHONE: (952) 946-4700

PLANS PREPARED BY:

SSC
7803 Glenroy Road, Suite 102
Bloomington, Minnesota 55439
Phone: 952-831-0131
Fax: 913-438-7777

STRUCTURAL/CIVIL ENGINEER:
I hereby certify that this plan, specification, or report was prepared by me or under my direct supervision and that I am a duly Licensed Professional Engineer under the laws of the state of Minnesota.

Signature — MICHAEL L. OWENS, Typed or Printed name
Date: 12/15/14 — Reg. NO.: 44052
Pages or sheets covered by this certification: Per Responsible Discipline: STRUCTURAL/CIVIL SC

ELECTRICAL ENGINEER:
I hereby certify that this plan, specification, or report was prepared by me or under my direct supervision and that I am a duly Licensed Professional Engineer under the laws of the state of Minnesota.

Signature — SHELTON D. KEIGLING, Typed or Printed name
Date — Reg. NO.: 47757
Pages or sheets covered by this certification: Per Responsible Discipline: ELECTRICAL E

DRAWING NOTICE:
THIS DRAWING HAS NOT BEEN PUBLISHED AND IS THE SOLE PROPERTY OF SSC, INC. AND IS LENT TO THE BORROWER FOR THEIR CONFIDENTIAL USE ONLY, AND IN CONSIDERATION OF THE LOAN OF THIS DRAWING, THE BORROWER PROMISES AND AGREES TO RETURN IT UPON REQUEST AND AGREES THAT IT WILL NOT BE REPRODUCED, COPIED, LENT OR OTHERWISE DISPOSED OF DIRECTLY OR INDIRECTLY, NOR USED FOR ANY PURPOSE OTHER THAN FOR WHICH IT IS FURNISHED.

SUBMITTALS

DESCRIPTION	DATE	BY	REV
ISSUED FOR REVIEW	09/27/13	DCS	A
ISSUED FOR REVIEW	12/09/13	JMB	B
ISSUED FOR REVIEW	12/17/13	PJW	C
ISSUED FOR CONSTRUCTION	09/12/14	PJW	0
REVISED SURVEY, FIBER EQUIPMENT	12/15/14	JMB	1

SITE NAME: MN07 LEON WILLMAR

SITE NUMBER: 265819

SITE ADDRESS: 515 2ND STREET SW WILLMAR, MINNESOTA 56201

SHEET DESCRIPTION: FOUNDATION PLAN AND DETAILS

SSC #:

SHEET NUMBER: A-5

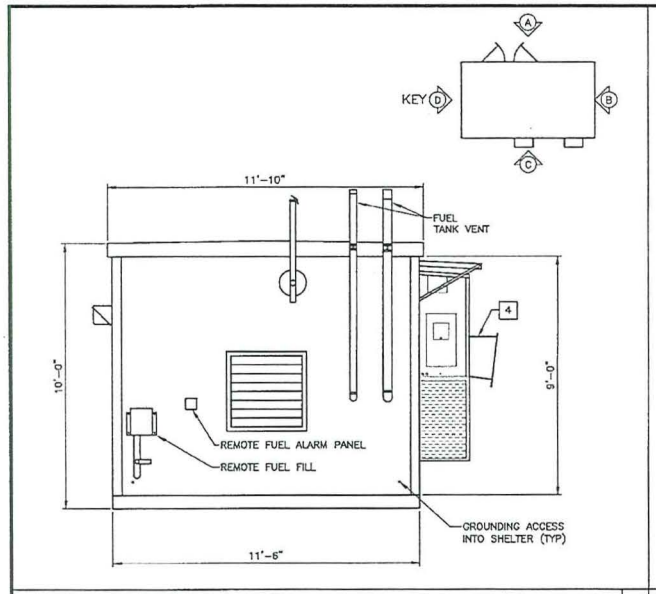

'FIBREBOND' EQUIPMENT SHELTER ELEVATION – "D" | 3

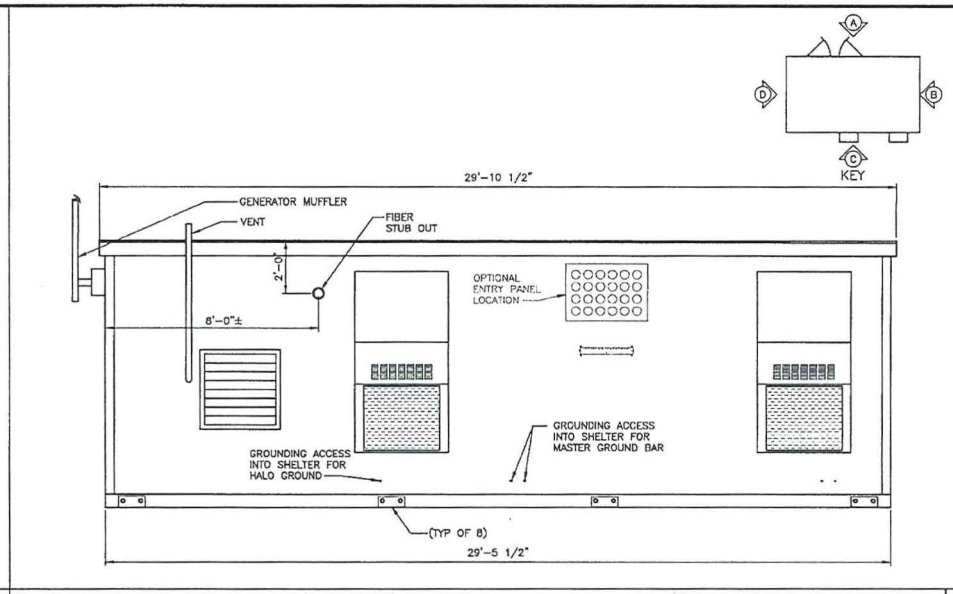

'FIBREBOND' EQUIPMENT SHELTER ELEVATION – "C" | 1

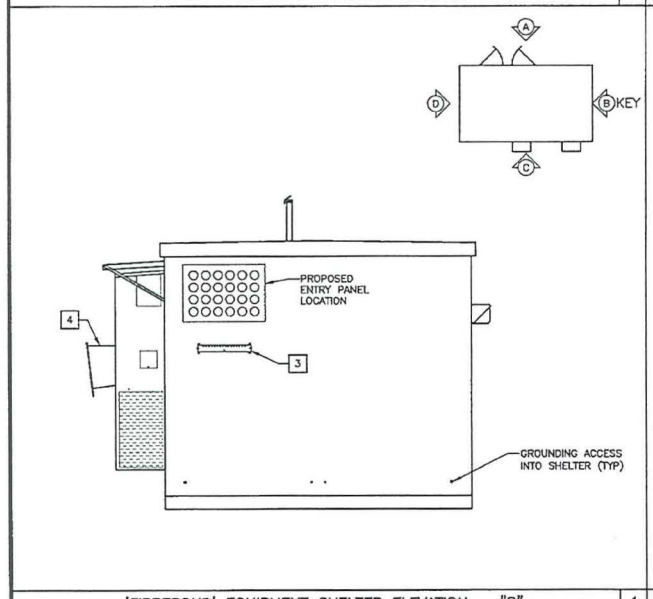

'FIBREBOND' EQUIPMENT SHELTER ELEVATION – "B" | 4

1. CONTRACTOR SHALL ROTATE GENERATOR EXHAUST AND SECURE PER SHELTER MANUFACTURER'S RECOMMENDATIONS.
2. CONTRACTOR SHALL INSTALL LIGHT FIXTURE PER SHELTER MANUFACTURER'S RECOMMENDATIONS.
3. CONTRACTOR SHALL INSTALL EXTERIOR GROUND BAR PER SHELTER MANUFACTURER'S RECOMMENDATIONS. GROUND BAR PROVIDED BY SHELTER MANUFACTURER.
4. CONTRACTOR SHALL FIELD INSTALL HVAC ECONOMIZER FILTER ASSEMBLIES PROVIDED BY SHELTER MANUFACTURER

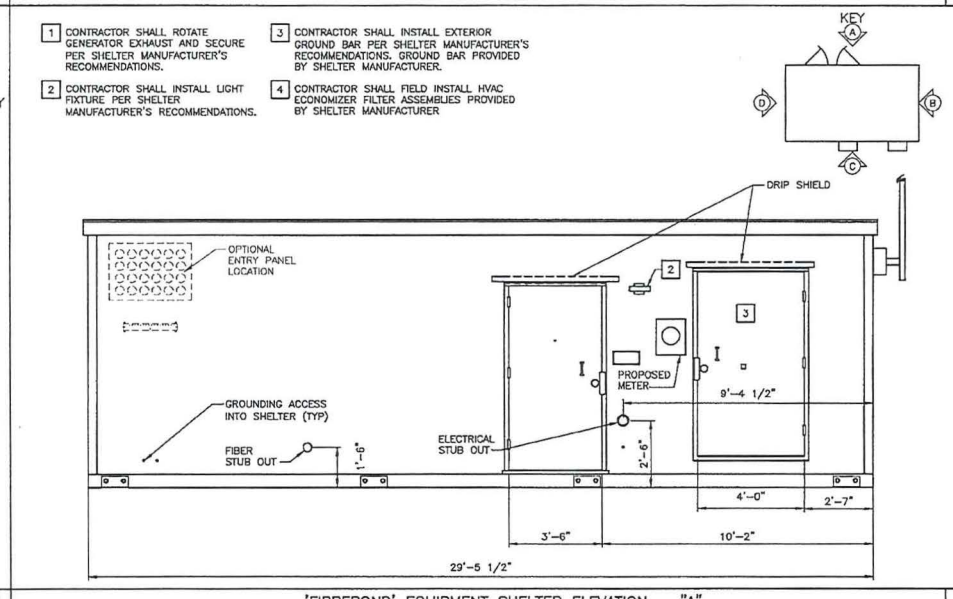

'FIBREBOND' EQUIPMENT SHELTER ELEVATION – "A" | 2

PLANS PREPARED FOR:

verizon wireless
10801 BUSH LAKE ROAD
BLOOMINGTON, MN 55438
PHONE: (952) 946-4700

PLANS PREPARED BY:

SSC
7803 Glenroy Road, Suite 102
Bloomington, Minnesota 55439
Phone: 952-831-0131
Fax: 913-438-7777

STRUCTURAL/CIVIL ENGINEER:

I hereby certify that this plan, specification, or report was prepared by me or under my direct supervision and that I am a duly Licensed Professional Engineer under the laws of the state of Minnesota.

Signature: MICHAEL L. OWENS (Typed or Printed name)
Date: 12/15/14
Reg. NO.: 44052
Pages or sheets covered by this certification: Per Responsible Discipline: STRUCTURAL/CIVIL SC

ELECTRICAL ENGINEER:

I hereby certify that this plan, specification, or report was prepared by me or under my direct supervision and that I am a duly Licensed Professional Engineer under the laws of the state of Minnesota.

Signature: SHELTON D. KEISLING (Typed or Printed name)
Date: 47757
Reg. NO.:
Pages or sheets covered by this certification: Per Responsible Discipline: ELECTRICAL E

DRAWING NOTICE:

THIS DRAWING HAS NOT BEEN PUBLISHED AND IS THE SOLE PROPERTY OF SSC, INC. AND IS LENT TO THE BORROWER FOR THEIR CONFIDENTIAL USE ONLY, AND IN CONSIDERATION OF THE LOAN OF THIS DRAWING, THE BORROWER PROMISES AND AGREES TO RETURN IT UPON REQUEST AND AGREES THAT IT WILL NOT BE REPRODUCED, COPIED, LENT OR OTHERWISE DISPOSED OF DIRECTLY OR INDIRECTLY, NOR USED FOR ANY PURPOSE OTHER THAN FOR WHICH IT IS FURNISHED

SUBMITTALS

DESCRIPTION	DATE	BY	REV
ISSUED FOR REVIEW	09/27/13	DDS	A
ISSUED FOR REVIEW	12/09/13	JMB	B
ISSUED FOR REVIEW	12/17/13	PJW	C
ISSUED FOR CONSTRUCTION	09/12/14	PJW	0
REVISED SURVEY, FIBER EQUIPMENT	12/15/14	JMB	1

SITE NAME:
MN07 LEON WILLMAR

SITE NUMBER:
265819

SITE ADDRESS:
515 2ND STREET SW
WILLMAR, MINNESOTA
56201

SHEET DESCRIPTION:
SHELTER ELEVATIONS

SSC #:

SHEET NUMBER:
A-6

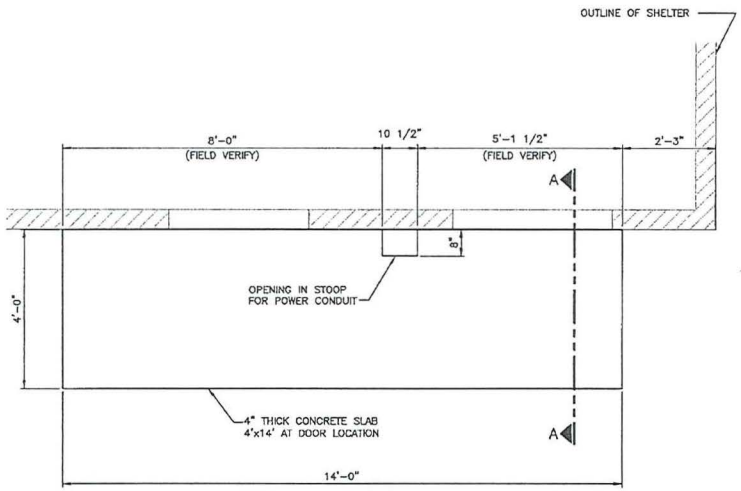

STOOP PLAN | 3

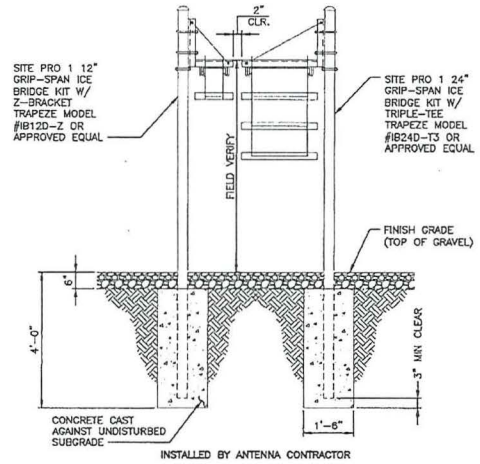

ICE BRIDGE SUPPORT POST | 1

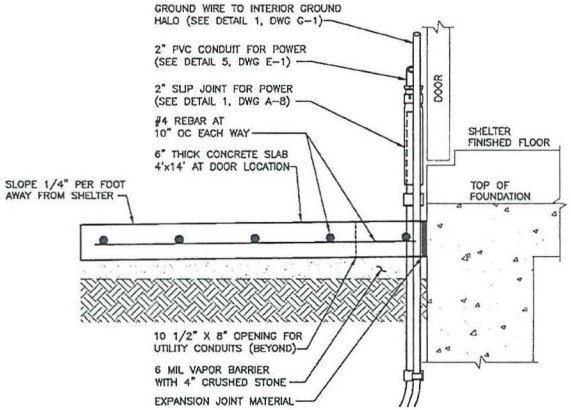

SECTION A-A

STOOP DETAIL | 4

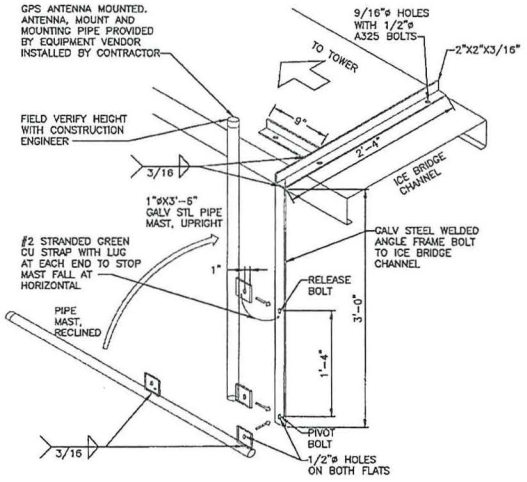

TYPICAL G.P.S. MOUNTING DETAIL | 2

PLANS PREPARED FOR:

verizon wireless
10801 BUSH LAKE ROAD
BLOOMINGTON, MN 55438
PHONE: (952) 946-4700

PLANS PREPARED BY:

SSC
7803 Glenroy Road, Suite 102
Bloomington, Minnesota 55439
Phone: 952-831-0131
Fax: 913-438-7777

STRUCTURAL/CIVIL ENGINEER:

I hereby certify that this plan, specification, or report was prepared by me or under my direct supervision and that I am a duly Licensed Professional Engineer under the laws of the state of Minnesota.

Signature: MICHAEL L. OWENS (Typed or Printed name)
Date: 12/15/14
Reg. NO.: 44052
Pages or sheets covered by this certification:
Per Responsible Discipline: STRUCTURAL/CIVIL SC

ELECTRICAL ENGINEER:

I hereby certify that this plan, specification, or report was prepared by me or under my direct supervision and that I am a duly Licensed Professional Engineer under the laws of the state of Minnesota.

Signature: SHELTON D. KEISLING (Typed or Printed name)
Date: 47757
Reg. NO.:
Pages or sheets covered by this certification:
Per Responsible Discipline: ELECTRICAL E

DRAWING NOTICE:

THIS DRAWING HAS NOT BEEN PUBLISHED AND IS THE SOLE PROPERTY OF SSC, INC. AND IS LENT TO THE BORROWER FOR THEIR CONFIDENTIAL USE ONLY, AND IN CONSIDERATION OF THE LOAN OF THIS DRAWING, THE BORROWER PROMISES AND AGREES TO RETURN IT UPON REQUEST AND AGREES THAT IT WILL NOT BE REPRODUCED, COPIED, LENT OR OTHERWISE DISPOSED OF DIRECTLY OR INDIRECTLY, NOR USED FOR ANY PURPOSE OTHER THAN FOR WHICH IT IS FURNISHED.

SUBMITTALS

DESCRIPTION	DATE	BY	REV
ISSUED FOR REVIEW	09/27/13	DDG	A
ISSUED FOR REVIEW	12/09/13	JMB	B
ISSUED FOR REVIEW	12/17/13	PJW	C
ISSUED FOR CONSTRUCTION	09/12/14	PJW	0
REVISED SURVEY, FIBER EQUIPMENT	12/15/14	JMB	1

SITE NAME:
MN07 LEON WILLMAR

SITE NUMBER:
265819

SITE ADDRESS:
515 2ND STREET SW
WILLMAR, MINNESOTA
56201

SHEET DESCRIPTION:
DETAILS
(1 OF 2)

SSC #:

SHEET NUMBER:
A-7

NOTE:
DURING EXCAVATION OF THE FIBER TRENCH, GC SHALL COORDINATE WITH LANDLORD FOR ADDITIONAL FIBER LINE TO BE INSTALLED BY LANDLORD'S PRIVATE FIBER INSTALLATION CONTRACTOR. GC SHALL NOT FILL IN TRENCH UNTIL LANDLORD'S CONTRACTOR HAS INSTALLED SEPARATE FIBER CONDUIT.

DETAIL NOT USED | 4

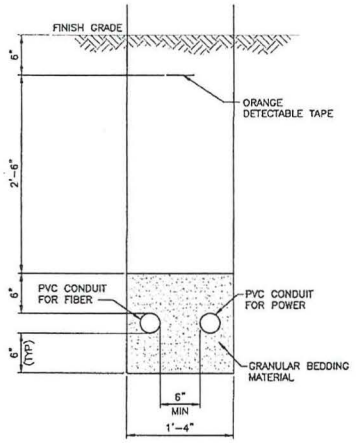

NOTES:

1. COMMUNICATION AND POWER CONDUITS MAY BE RUN IN SEPARATE TRENCHES. CONDUITS SHALL MAINTAIN 6 INCHES MINIMUM SEPARATION.
2. SEE SITE PLANS FOR EXACT SIZE AND QUANTITY OF CONDUITS.
3. CONTRACTOR SHALL VERIFY FROST DEPTH FOR THIS PROJECT.

TYPICAL CONDUIT TRENCH | 3

NOTES:
CARLON #
2 INCHES. – #E954JXX,
3 INCHES – #E954LXX,
4 INCHES – #E954NXX,

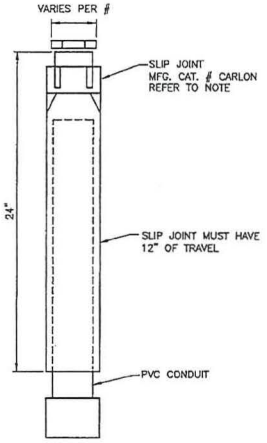

N.T.S.

SLIP JOINT DETAIL | 1

DETAIL NOT USED | 5

NOTES:

1. CONTRACTOR SHALL COORDINATE INSTALLATION WITH FIELD ENGINEER PRIOR TO CONDUIT BEING PLACED. FIELD ENGINEER WILL DETERMINE THE LOCATION OF THE HANDHOLE AT THE R.O.W AND AT THE FIBER PEDESTAL LOCATION.
2. ALL MATERIALS SHALL BE SUPPLIED AND INSTALLED BY THE CONTRACTOR UNLESS OTHERWISE NOTED.
3. ALL CONDUITS SHALL BE EQUIPPED WITH 200LB TEST MULE TAPE AND SHALL BE CAPPED UNTIL CABLE INSTALLATION. EXTEND ENDS OF CONDUIT UP 12" ABOVE GRADE IF UTILITY COMPANY SUPPLIED AND INSTALLED ITEMS ARE NOT IN PLACE.
4. ANY VARIATIONS FROM THESE DRAWINGS AND DETAIL SHALL BE COORDINATED WITH THE FIELD ENGINEER.
5. ALL CONDUITS SHALL BE SCH 40 PVC, EXCEPT THAT SCH 80 SHALL BE USED UNDER ROADS.

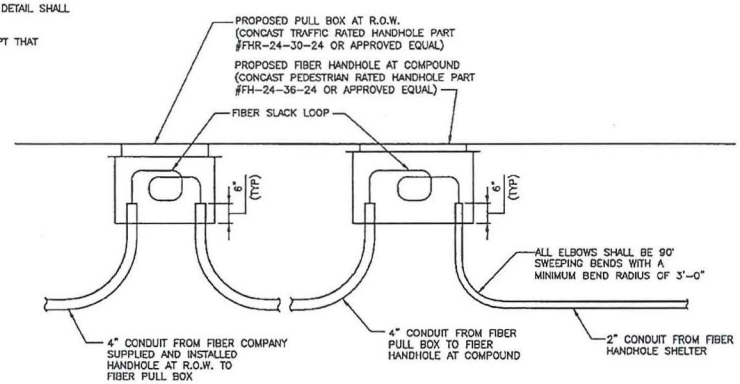

TYPICAL HANDHOLE OR PULL BOX DETAIL | 2

PLANS PREPARED FOR:

verizon wireless
10801 BUSH LAKE ROAD
BLOOMINGTON, MN 55438
PHONE: (952) 946-4700

PLANS PREPARED BY:

SSC
7803 Glenroy Road, Suite 102
Bloomington, Minnesota 55439
Phone: 952-831-0131
Fax: 913-438-7777

STRUCTURAL/CIVIL ENGINEER:

I hereby certify that this plan, specification, or report was prepared by me or under my direct supervision and that I am a duly Licensed Professional Engineer under the laws of the state of Minnesota.

Signature — MICHAEL L. OWENS, Typed or Printed name
Date 12/15/14 — 44052, Reg. NO.
Pages or sheets covered by this certification: Per Responsible Discipline: STRUCTURAL/CIVIL SC

ELECTRICAL ENGINEER:

I hereby certify that this plan, specification, or report was prepared by me or under my direct supervision and that I am a duly Licensed Professional Engineer under the laws of the state of Minnesota.

Signature — SHELTON D. KEIGLING, Typed or Printed name
Date — 47757, Reg. NO.
Pages or sheets covered by this certification: Per Responsible Discipline: ELECTRICAL E

DRAWING NOTICE:

THIS DRAWING HAS NOT BEEN PUBLISHED AND IS THE SOLE PROPERTY OF SSC, INC. AND IS LENT TO THE BORROWER FOR THEIR CONFIDENTIAL USE ONLY, AND IN CONSIDERATION OF THE LOAN OF THIS DRAWING, THE BORROWER PROMISES AND AGREES TO RETURN IT UPON REQUEST AND AGREES THAT IT WILL NOT BE REPRODUCED, COPIED, LENT OR OTHERWISE DISPOSED OF DIRECTLY OR INDIRECTLY, NOR USED FOR ANY PURPOSE OTHER THAN FOR WHICH IT IS FURNISHED.

SUBMITTALS

DESCRIPTION	DATE	BY	REV
ISSUED FOR REVIEW	09/27/13	DDS	A
ISSUED FOR REVIEW	12/09/13	JAB	B
ISSUED FOR REVIEW	12/17/13	PJW	C
ISSUED FOR CONSTRUCTION	09/12/14	PJW	0
REVISED SURVEY, FIBER EQUIPMENT	12/15/14	JAB	1

SITE NAME:
MN07 LEON WILLMAR

SITE NUMBER:
265819

SITE ADDRESS:
515 2ND STREET SW
WILLMAR, MINNESOTA
56201

SHEET DESCRIPTION:
DETAILS
(2 OF 2)

SSC #:

SHEET NUMBER:
A-8

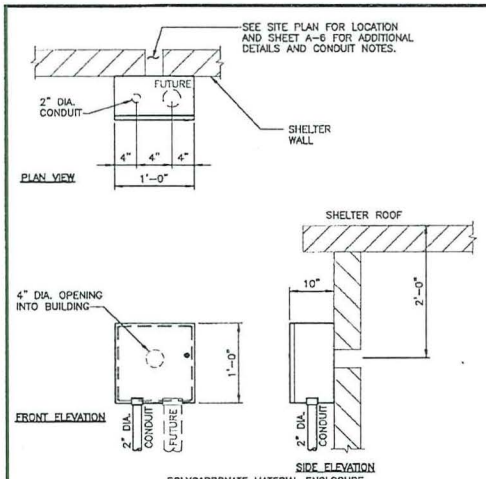

FIBER BOX DETAIL | 6

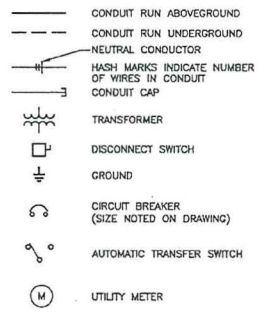

ELECTRICAL SYMBOLS | 4

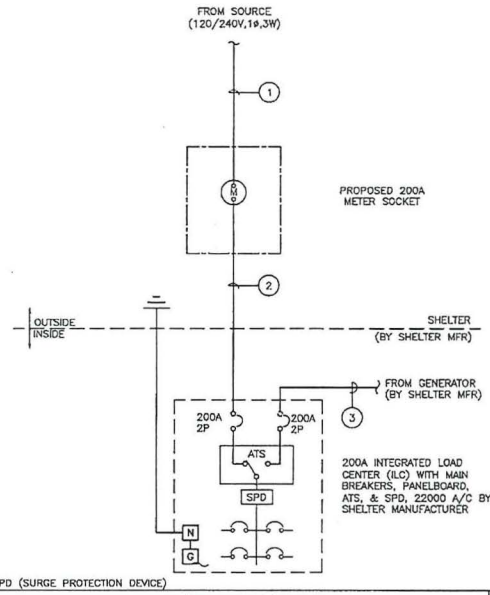

CONNECTION DIAGRAM | 1

NO.	FROM	TO	CONFIGURATION	FUNCTION
1	SOURCE	METER SOCKET	3#3/0 BY UTILITY IN 3" C W/PULLSTRING BY CONTRACTOR	NORMAL POWER FEEDER TO METER SOCKET
2	METER SOCKET	ILC	3#3/0, 1#6G, 2" C	NORMAL POWER FEEDER TO PANEL
3	GENERATOR BREAKER	ILC	3#3/0, 1#6G, 2" C	EMERGENCY POWER FEEDER TO ATS

CIRCUIT SCHEDULE | 2

NOTES:

1. GROUND ROD – 3/4" DIA X 10' LONG COPPER CLAD STEEL GROUND ROD
2. #2 STRANDED INSULATED CU GROUND WIRE

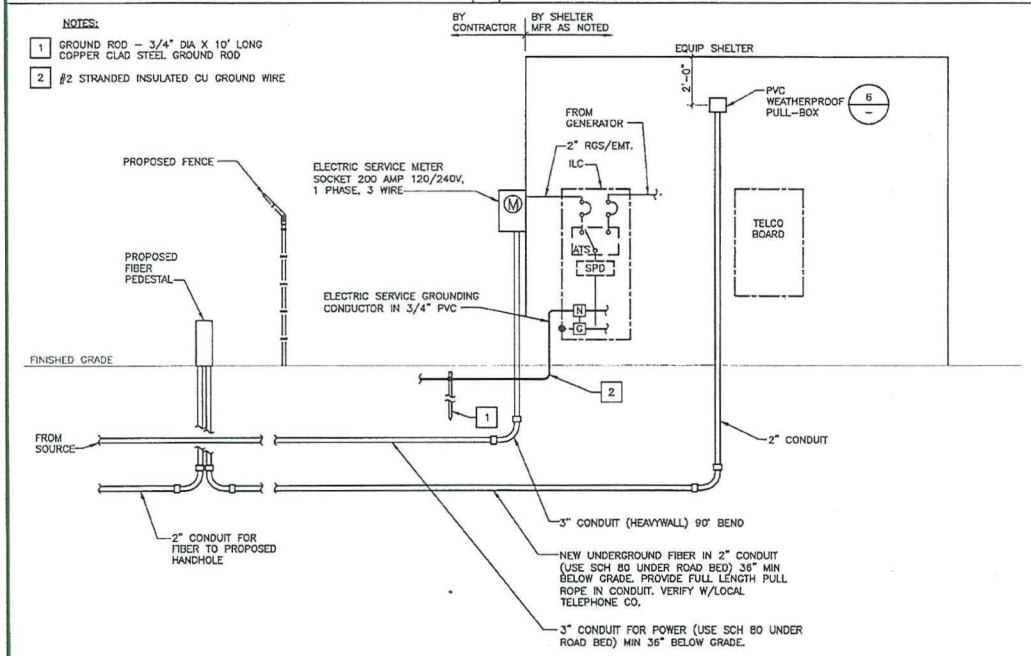

ELECTRICAL RISER DIAGRAM | 5

1. ALL ELECTRICAL WORK SHALL CONFORM TO REQUIREMENTS OF THE NATIONAL ELECTRICAL CODE AS A MINIMUM STANDARD.
2. ALL EXTERIOR ABOVE GROUND CONDUIT SHALL BE RIGID GALVANIZED STEEL (RGS) AND ALL INTERIOR ABOVE GROUND CONDUIT SHALL BE ELECTRICAL METALLIC TUBING (EMT) UNLESS OTHERWISE NOTED OR INDICATED.
3. ALL UNDERGROUND CONDUIT SHALL BE SCH 40 PVC UNLESS OTHERWISE INDICATED OR AS REQUIRED BY LOCAL UTILITY COMPANY. ALL UNDERGROUND ELBOWS SHALL BE SWEEPING ENDS.
4. ALL WIRING AND CONDUIT TO BE SUPPLIED AND INSTALLED BY GENERAL CONTRACTOR UNLESS OTHERWISE NOTED.

GENERAL NOTES | 3

PLANS PREPARED FOR:

verizon wireless
10801 BUSH LAKE ROAD
BLOOMINGTON, MN 55438
PHONE: (952) 946-4700

PLANS PREPARED BY:

SSC
7803 Glenroy Road, Suite 102
Bloomington, Minnesota 55439
Phone: 952-831-0131
Fax: 913-439-7777

STRUCTURAL/CIVIL ENGINEER:

I hereby certify that this plan, specification, or report was prepared by me or under my direct supervision and that I am a duly Licensed Professional Engineer under the laws of the state of Minnesota.

Signature — MICHAEL L. OWENS, Typed or Printed name
Date — 44902, Reg. No.
Pages or sheets covered by this certification: Per Responsible Discipline: STRUCTURAL/CIVIL SC

ELECTRICAL ENGINEER:

I hereby certify that this plan, specification, or report was prepared by me or under my direct supervision and that I am a duly Licensed Professional Engineer under the laws of the state of Minnesota.

Signature — SHELTON D. KEIGLING, Typed or Printed name
Date 12-15-14 — 47757, Reg. No.
Pages or sheets covered by this certification: Per Responsible Discipline: ELECTRICAL E

DRAWING NOTICE:

THIS DRAWING HAS NOT BEEN PUBLISHED AND IS THE SOLE PROPERTY OF SSC, INC. AND IS LENT TO THE BORROWER FOR THEIR CONFIDENTIAL USE ONLY, AND IN CONSIDERATION OF THE LOAN OF THIS DRAWING THE BORROWER PROMISES AND AGREES TO RETURN IT UPON REQUEST AND AGREES THAT IT WILL NOT BE REPRODUCED, COPIED, LENT OR OTHERWISE DISPOSED OF DIRECTLY OR INDIRECTLY, NOR USED FOR ANY PURPOSE OTHER THAN FOR WHICH IT IS FURNISHED.

SUBMITTALS

DESCRIPTION	DATE	BY	REV
ISSUED FOR REVIEW	09/27/13	DOS	A
ISSUED FOR REVIEW	12/09/13	JMB	B
ISSUED FOR REVIEW	12/17/13	PJW	C
ISSUED FOR CONSTRUCTION	09/12/14	PJW	0
REVISED SURVEY, FIBER EQUIPMENT	12/15/14	JMB	1

SITE NAME: MN07 LEON WILLMAR

SITE NUMBER: 265819

SITE ADDRESS: 515 2ND STREET SW WILLMAR, MINNESOTA 56201

SHEET DESCRIPTION: ELECTRICAL GENERAL

SSC #:

SHEET NUMBER: E-1

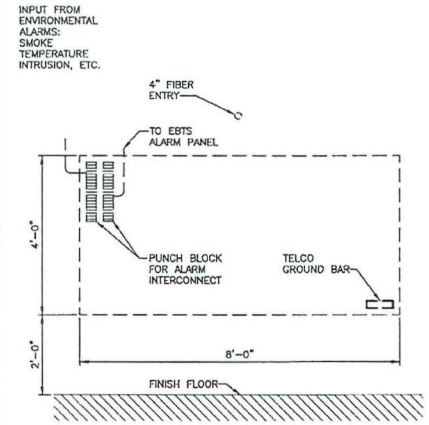

TYPICAL TELCO BOARD LAYOUT | 4

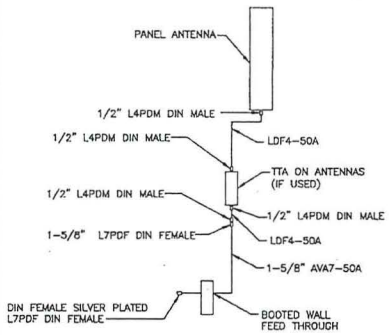

PANEL ANTENNA CABLE RUN | 2

NOTE:
DO NOT PLACE ANY ELECTRICAL
EQUIPMENT, CONDUIT OR CABLE WITHIN
18" OF GROUND LINES IN ANY DIRECTION.

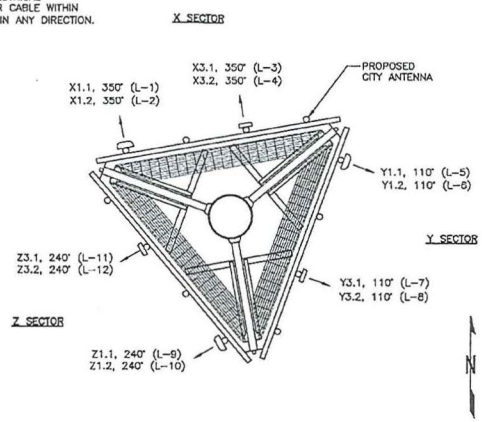

ANTENNA LAYOUT

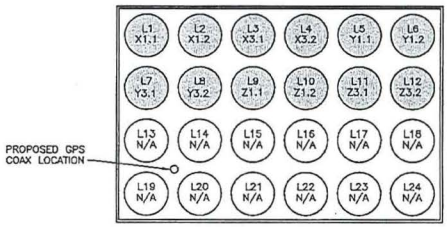

ENTRY PANEL LAYOUT FROM INSIDE SHELTER

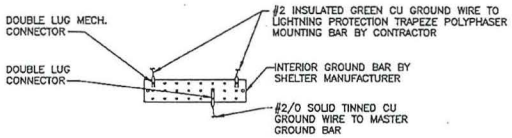

NOTE: DOUBLE-LUG ALL CONNECTIONS TO ALL GROUND BARS.

INTERIOR GROUND BAR

ENTRY PANEL NOTES:

1. ENTRY PANEL LAYOUT AS VIEWED FROM INSIDE THE SHELTER. LUCENT LABELING SHOWN. REPLACE THE A WITH X, B WITH Y AND G WITH Z FOR MOTOROLA EQUIPMENT.
2. IF OUTDOOR CABINETS ARE USED, THIS SHALL BE THE VIEW OF THE LAYOUT OF THE LINES AT THE TRANSITION TO THE EQUIPMENT JUMPERS FROM THE ICE BRIDGE.

FEEDLINE TAG IDENTIFICATION | 1

DETAIL NOT USED | 5

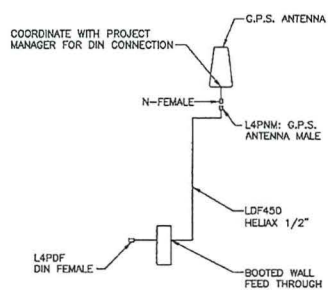

G.P.S. ANTENNA CABLE RUN | 3

PLANS PREPARED FOR:

verizon wireless
10801 BUSH LAKE ROAD
BLOOMINGTON, MN 55438
PHONE: (952) 946-4700

PLANS PREPARED BY:

SSC
7803 Glenroy Road, Suite 102
Bloomington, Minnesota 55439
Phone: 952-831-0131
Fax: 913-438-7777

STRUCTURAL/CIVIL ENGINEER:

I hereby certify that this plan, specification, or report was prepared by me or under my direct supervision and that I am a duly Licensed Professional Engineer under the laws of the state of Minnesota.

Signature — MICHAEL L. OWENS, Typed or Printed name
Date — 44052, Reg. NO.
Pages or sheets covered by this certification:
Per Responsible Discipline: STRUCTURAL/CIVIL SC

ELECTRICAL ENGINEER:

I hereby certify that this plan, specification, or report was prepared by me or under my direct supervision and that I am a duly Licensed Professional Engineer under the laws of the state of Minnesota.

Signature — SHELTON D. KEIBLING, Typed or Printed name
Date 12-15-14 — 47757, Reg. NO.
Pages or sheets covered by this certification:
Per Responsible Discipline: ELECTRICAL E

DRAWING NOTICE:

THIS DRAWING HAS NOT BEEN PUBLISHED AND IS THE SOLE PROPERTY OF SSC, INC. AND IS LENT TO THE BORROWER FOR THEIR CONFIDENTIAL USE ONLY, AND IN CONSIDERATION OF THE LOAN OF THIS DRAWING, THE BORROWER PROMISES AND AGREES TO RETURN IT UPON REQUEST AND AGREES THAT IT WILL NOT BE REPRODUCED, COPIED, LENT OR OTHERWISE DISPOSED OF DIRECTLY OR INDIRECTLY, NOR USED FOR ANY PURPOSE OTHER THAN FOR WHICH IT IS FURNISHED.

SUBMITTALS

DESCRIPTION	DATE	BY	REV
ISSUED FOR REVIEW	09/27/13	DGS	A
ISSUED FOR REVIEW	12/09/13	JAB	B
ISSUED FOR REVIEW	12/17/13	PJW	C
ISSUED FOR CONSTRUCTION	09/12/14	PJW	0
REVISED SURVEY, FIBER EQUIPMENT	12/15/14	JAB	1

SITE NAME: MN07 LEON WILLMAR

SITE NUMBER: 265819

SITE ADDRESS: 515 2ND STREET SW
WILLMAR, MINNESOTA
56201

SHEET DESCRIPTION: ELECTRICAL DETAILS

SSC #:

SHEET NUMBER: E-2

NOTES:

1. ALL GROUND RODS SHALL BE SPACED AT 8'-0" MIN 15'-0" MAX UNLESS NOTED OTHERWISE
2. ALL GROUND LEADS ABOVE GROUND FROM THE SHELTER GROUND RING GOING INTO THE SHELTER/TOWER SHALL HAVE A 1/2" RIGID PVC SLEEVE. ATTACH PVC TO SHELTER AND/OR SHELTER FOUNDATION WITH "C" CLAMPS. CLAMPS SHALL NOT FULLY ENCIRCLE PVC. ALL OTHERS SHALL BE 1/2" NON-METALLIC FLEXIBLE SLEEVE.
3. BOND EXTERIOR SHELTER GROUND BAR TO SHELTER GROUND RING (TYP 2 PLCS)
4. BOND LOWER TOWER GROUND BAR TO TOWER GROUND RING (TYP 2 PLCS)
5. BOND ICE BRIDGE CANOPY TO ICE BRIDGE POST WITH #2 SOLID BARE TINNED CU GROUND WIRE
6. #2 SOLID TINNED CU GROUND WIRE TO GAS FILL, GAS VENT TUBES, GENERATOR EXHAUST PIPE AND LOUVERS. BOND TO LOUVERS AND EXHAUST PIPE WITH 2 HOLE COMPRESSION LUGS.

GROUNDING LEGEND

- GROUNDING CONDUCTOR ABOVE GROUND
- GROUNDING CONDUCTOR UNDER GROUND
- GND BUS / GND COND — GROUND BUS WITH COMPRESSION CONNECTION
- MECHANICAL CONNECTION
- CADWELD CONNECTION
- GROUND ROD

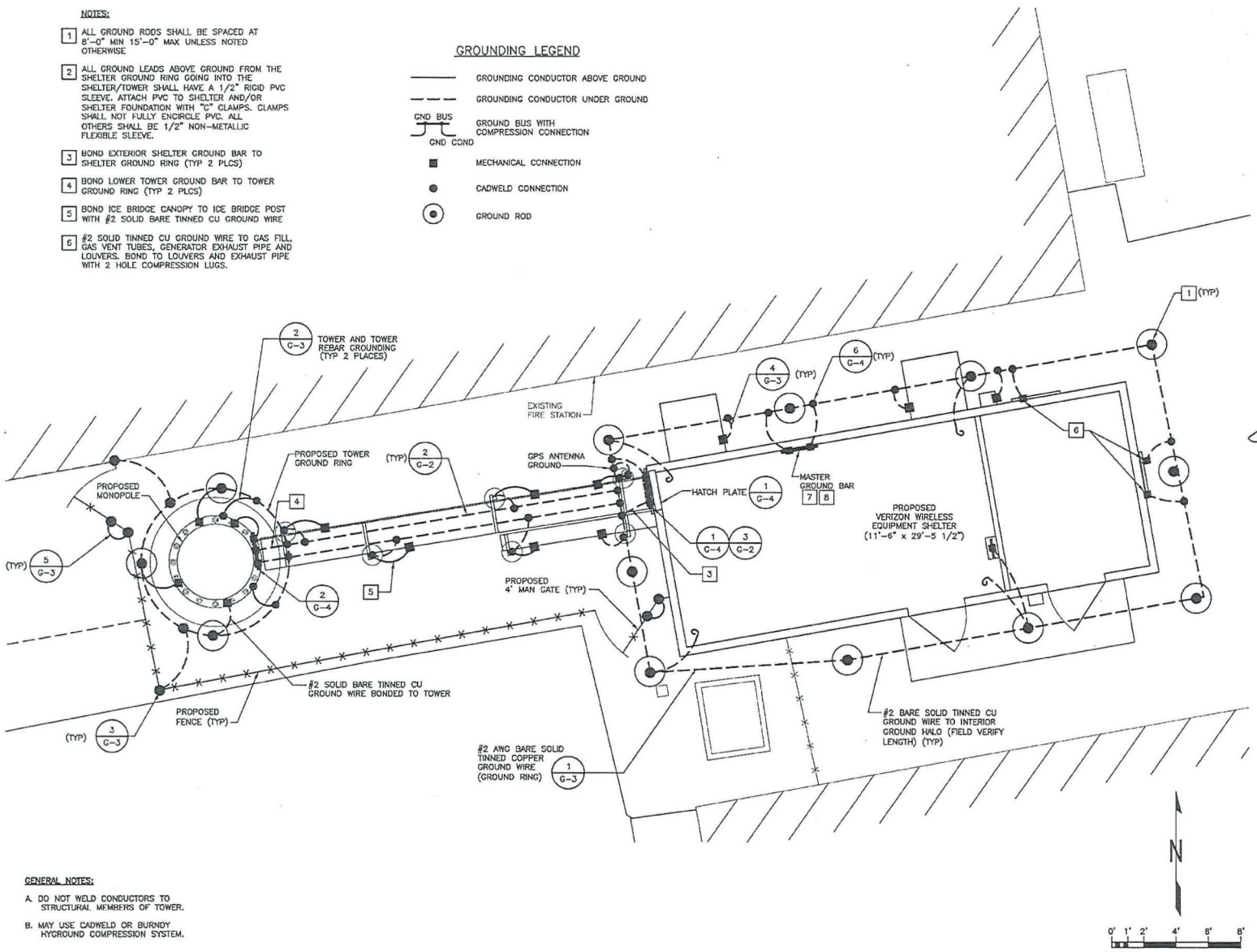

GENERAL NOTES:

A. DO NOT WELD CONDUCTORS TO STRUCTURAL MEMBERS OF TOWER.

B. MAY USE CADWELD OR BURNDY HYGROUND COMPRESSION SYSTEM.

GROUNDING PLAN | 1

PLANS PREPARED FOR:

verizon wireless
10801 BUSH LAKE ROAD
BLOOMINGTON, MN 55438
PHONE: (952) 946-4700

PLANS PREPARED BY:

SSC
7803 Glenroy Road, Suite 102
Bloomington, Minnesota 55439
Phone: 952-831-0131
Fax: 913-438-7777

STRUCTURAL/CIVIL ENGINEER:

I hereby certify that this plan, specification, or report was prepared by me or under my direct supervision and that I am a duly Licensed Professional Engineer under the laws of the state of Minnesota.

Signature — MICHAEL L. OWENS, Typed or Printed name
Date — 44052, Reg. NO.
Pages or sheets covered by this certification: Per Responsible Discipline: STRUCTURAL/CIVIL SC

ELECTRICAL ENGINEER:

I hereby certify that this plan, specification, or report was prepared by me or under my direct supervision and that I am a duly Licensed Professional Engineer under the laws of the state of Minnesota.

Signature — SHELTON D. KEIGLING, Typed or Printed name
Date 12-15-14 — 47757, Reg. NO.
Pages or sheets covered by this certification: Per Responsible Discipline: ELECTRICAL E

DRAWING NOTICE:

THIS DRAWING HAS NOT BEEN PUBLISHED AND IS THE SOLE PROPERTY OF SSC, INC. AND IS LENT TO THE BORROWER FOR THEIR CONFIDENTIAL USE ONLY, AND IN CONSIDERATION OF THE LOAN OF THIS DRAWING, THE BORROWER PROMISES AND AGREES TO RETURN IT UPON REQUEST AND AGREES THAT IT WILL NOT BE REPRODUCED, COPIED, LENT OR OTHERWISE DISPOSED OF DIRECTLY OR INDIRECTLY, NOR USED FOR ANY PURPOSE OTHER THAN FOR WHICH IT IS FURNISHED.

SUBMITTALS

DESCRIPTION	DATE	BY	REV
ISSUED FOR REVIEW	09/27/13	DCS	A
ISSUED FOR REVIEW	12/09/13	JAB	B
ISSUED FOR REVIEW	12/17/13	PJW	C
ISSUED FOR CONSTRUCTION	09/12/14	PJW	0
REVISED SURVEY, FIBER EQUIPMENT	12/15/14	JAB	1

SITE NAME: MN07 LEON WILLMAR

SITE NUMBER: 265819

SITE ADDRESS: 515 2ND STREET SW
WILLMAR, MINNESOTA
56201

SHEET DESCRIPTION: GROUNDING PLAN

SSC #:

SHEET NUMBER: G-1

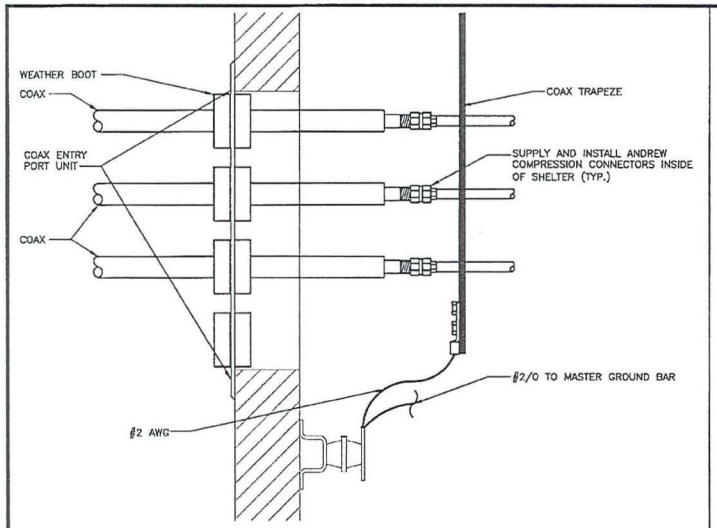

COAX ENTRY PORT GROUNDING DETAIL | 3

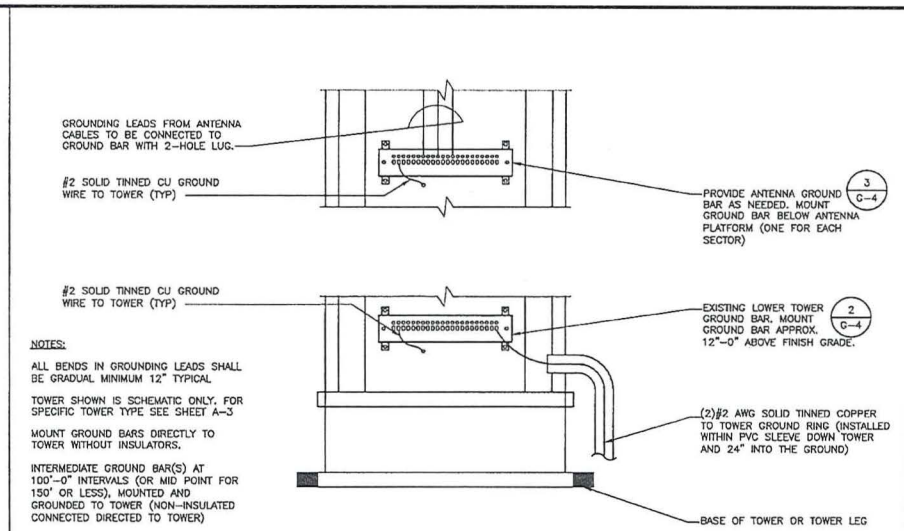

NOTES:

ALL BENDS IN GROUNDING LEADS SHALL BE GRADUAL MINIMUM 12" TYPICAL

TOWER SHOWN IS SCHEMATIC ONLY. FOR SPECIFIC TOWER TYPE SEE SHEET A-3

MOUNT GROUND BARS DIRECTLY TO TOWER WITHOUT INSULATORS.

INTERMEDIATE GROUND BAR(S) AT 100'-0" INTERVALS (OR MID POINT FOR 150' OR LESS), MOUNTED AND GROUNDED TO TOWER (NON-INSULATED CONNECTED DIRECTED TO TOWER)

TOWER GROUNDING DETAIL | 1

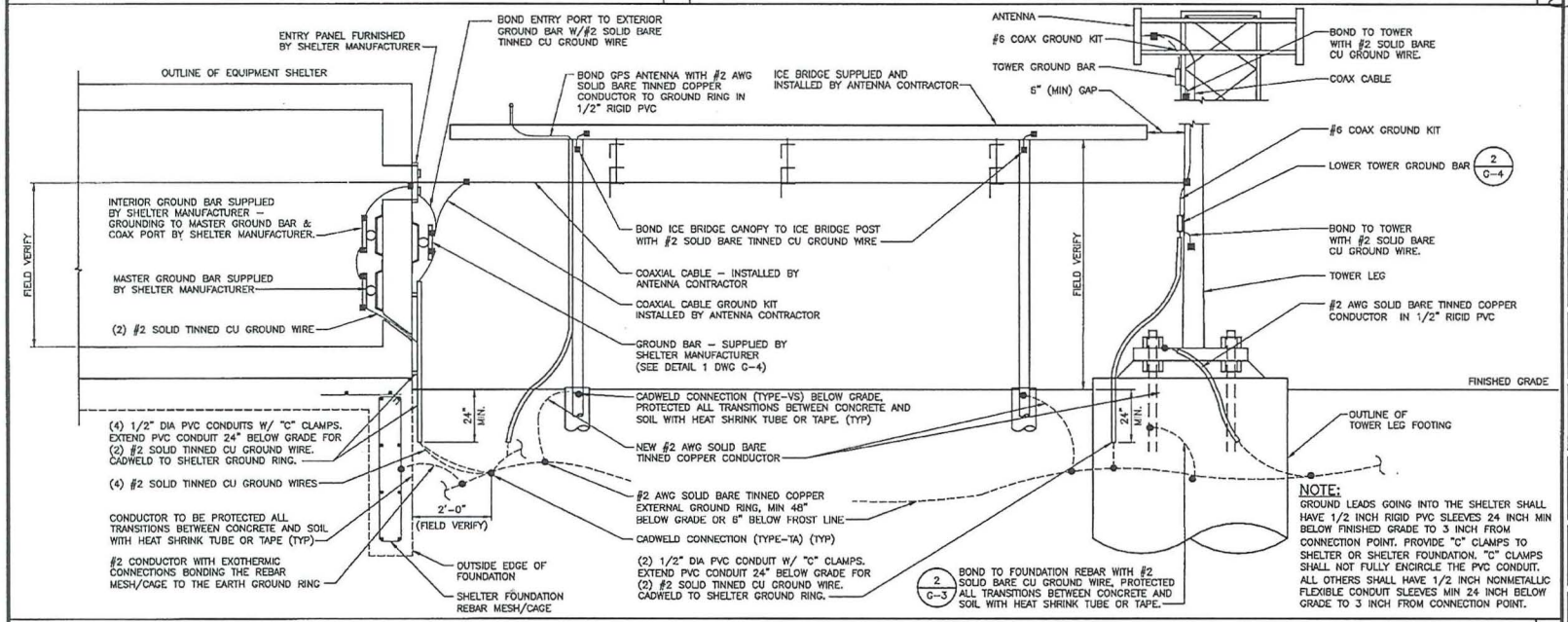

NOTE:
GROUND LEADS GOING INTO THE SHELTER SHALL HAVE 1/2 INCH RIGID PVC SLEEVES 24 INCH MIN BELOW FINISHED GRADE TO 3 INCH FROM CONNECTION POINT. PROVIDE "C" CLAMPS TO SHELTER OR SHELTER FOUNDATION. "C" CLAMPS SHALL NOT FULLY ENCIRCLE THE PVC CONDUIT. ALL OTHERS SHALL HAVE 1/2 INCH NONMETALLIC FLEXIBLE CONDUIT SLEEVES MIN 24 INCH BELOW GRADE TO 3 INCH FROM CONNECTION POINT.

GROUNDING RISER DIAGRAM | 2

PLANS PREPARED FOR:

verizon wireless
10801 BUSH LAKE ROAD
BLOOMINGTON, MN 55439
PHONE: (952) 946-4700

PLANS PREPARED BY:

SSC
7803 Glenroy Road, Suite 102
Bloomington, Minnesota 55439
Phone: 952-831-0131
Fax: 913-438-7777

STRUCTURAL/CIVIL ENGINEER:

I hereby certify that this plan, specification, or report was prepared by me or under my direct supervision and that I am a duly Licensed Professional Engineer under the laws of the state of Minnesota.

Signature | MICHAEL L. OWENS Typed or Printed name
Date | 44062 Reg. NO.
Pages or sheets covered by this certification: Per Responsible Discipline: STRUCTURAL/CIVIL SC

ELECTRICAL ENGINEER:

I hereby certify that this plan, specification, or report was prepared by me or under my direct supervision and that I am a duly Licensed Professional Engineer under the laws of the state of Minnesota.

Signature | SHELTON D. KEISLING Typed or Printed name
Date 12-15-14 | 47757 Reg. NO.
Pages or sheets covered by this certification: Per Responsible Discipline: ELECTRICAL E

DRAWING NOTICE:

THIS DRAWING HAS NOT BEEN PUBLISHED AND IS THE SOLE PROPERTY OF SSC, INC. AND IS LENT TO THE BORROWER FOR THEIR CONFIDENTIAL USE ONLY, AND IN CONSIDERATION OF THE LOAN OF THIS DRAWING, THE BORROWER PROMISES AND AGREES TO RETURN IT UPON REQUEST AND AGREES THAT IT WILL NOT BE REPRODUCED, COPIED, LENT OR OTHERWISE DISPOSED OF DIRECTLY OR INDIRECTLY, NOR USED FOR ANY PURPOSE OTHER THAN FOR WHICH IT IS FURNISHED.

SUBMITTALS

DESCRIPTION	DATE	BY	REV
ISSUED FOR REVIEW	09/27/13	DCS	A
ISSUED FOR REVIEW	12/09/13	JMB	B
ISSUED FOR REVIEW	12/17/13	PJW	C
ISSUED FOR CONSTRUCTION	09/12/14	PJW	0
REVISED SURVEY, FIBER EQUIPMENT	12/15/14	JMB	1

SITE NAME:
MN07 LEON WILLMAR

SITE NUMBER:
265819

SITE ADDRESS:
515 2ND STREET SW
WILLMAR, MINNESOTA
56201

SHEET DESCRIPTION:
GROUND RISER DIAGRAM

SSC #:

SHEET NUMBER:
G-2

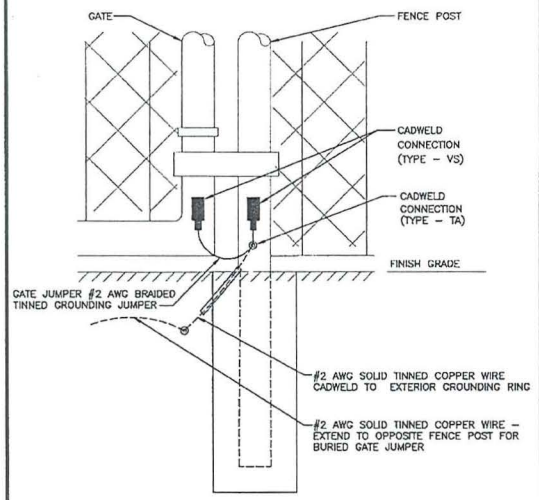

SWINGING GATE DETAIL | 5

NOTE:
GROUND WIRES SHALL BE ROUTED AND CADWELDED INSIDE THE FENCED COMPOUND.

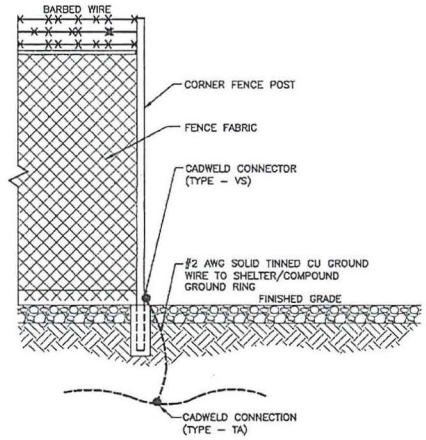

FENCE GROUNDING DETAIL | 3

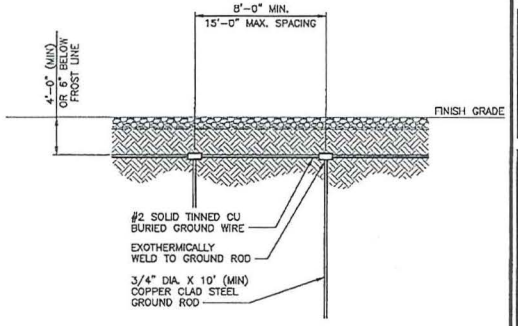

EXTERNAL SHELTER GROUND RING DETAIL | 1

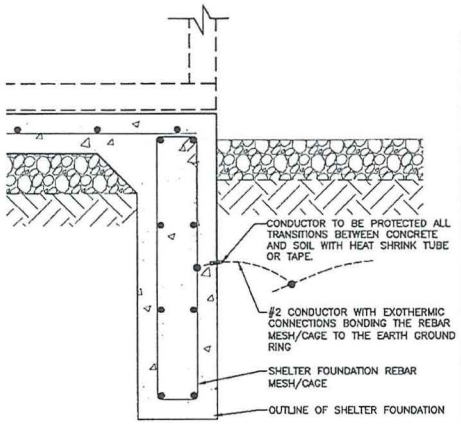

FOUNDATION GROUNDING DETAIL | 6

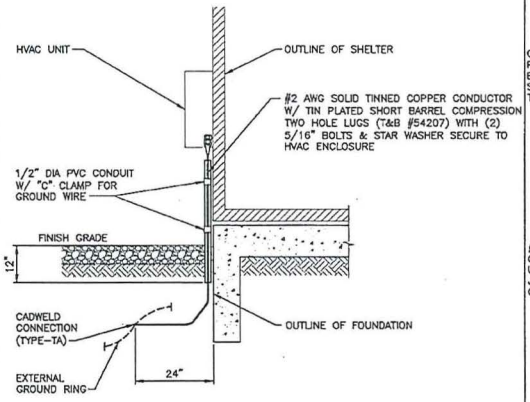

HVAC GROUNDING DETAIL | 4

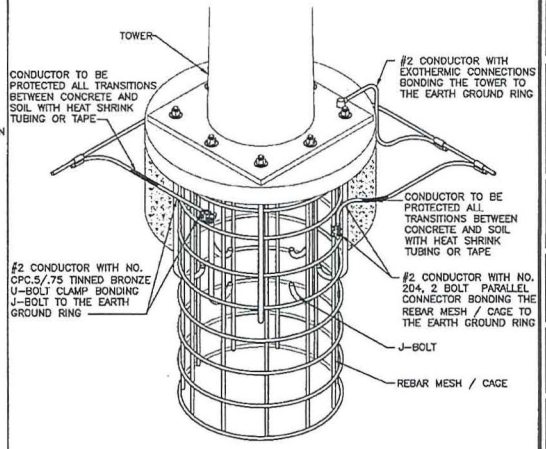

TOWER AND TOWER REBAR GROUNDING DETAIL | 2

PLANS PREPARED FOR:

verizon wireless
10801 BUSH LAKE ROAD
BLOOMINGTON, MN 55438
PHONE: (952) 946-4700

PLANS PREPARED BY:

SSC
7803 Glenroy Road, Suite 102
Bloomington, Minnesota 55439
Phone: 952-831-0131
Fax: 913-438-7777

STRUCTURAL/CIVIL ENGINEER:

I hereby certify that this plan, specification, or report was prepared by me or under my direct supervision and that I am a duly Licensed Professional Engineer under the laws of the state of Minnesota.

Signature — MICHAEL L. OWENS, Typed or Printed name
Date — 44052, Reg. NO.
Pages or sheets covered by this certification:
Per Responsible Discipline: STRUCTURAL/CIVIL SC

ELECTRICAL ENGINEER:

I hereby certify that this plan, specification, or report was prepared by me or under my direct supervision and that I am a duly Licensed Professional Engineer under the laws of the state of Minnesota.

Signature — SHELTON D. KEELING, Typed or Printed name
Date 12-15-14 — 47757, Reg. NO.
Pages or sheets covered by this certification:
Per Responsible Discipline: ELECTRICAL E

DRAWING NOTICE:

THIS DRAWING HAS NOT BEEN PUBLISHED AND IS THE SOLE PROPERTY OF SSC, INC. AND IS LENT TO THE BORROWER FOR THEIR CONFIDENTIAL USE ONLY, AND IN CONSIDERATION OF THE LOAN OF THIS DRAWING, THE BORROWER PROMISES AND AGREES TO RETURN IT UPON REQUEST AND AGREES THAT IT WILL NOT BE REPRODUCED, COPIED, LENT OR OTHERWISE DISPOSED OF DIRECTLY OR INDIRECTLY, NOR USED FOR ANY PURPOSE OTHER THAN FOR WHICH IT IS FURNISHED.

SUBMITTALS

DESCRIPTION	DATE	BY	REV
ISSUED FOR REVIEW	09/27/13	DGS	A
ISSUED FOR REVIEW	12/09/13	AMB	B
ISSUED FOR REVIEW	12/17/13	PJW	C
ISSUED FOR CONSTRUCTION	09/12/14	PJW	0
REVISED SURVEY, FIBER EQUIPMENT	12/15/14	AMB	1

SITE NAME:
MN07 LEON WILLMAR

SITE NUMBER:
265819

SITE ADDRESS:
515 2ND STREET SW
WILLMAR, MINNESOTA
56201

SHEET DESCRIPTION:
GROUNDING DETAILS
(1 OF 2)

SSC #:

SHEET NUMBER:
G-3

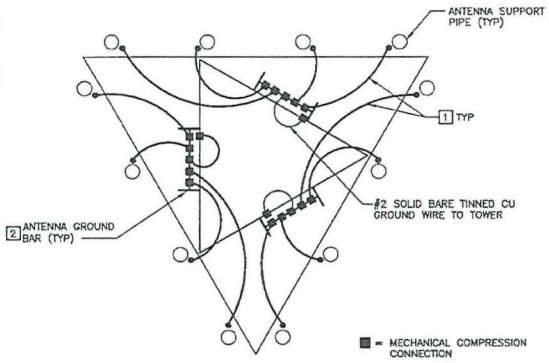

NOTES:

1. COAX GROUND KIT WIRES.
2. MOUNT TOWER GROUND BAR TO TOWER WITH ISOLATION BUSHINGS. CONTRACTOR TO REMOVE TOWER GALVANIZED COATING WHERE GROUND BAR COMES INTO CONTACT WITH TOWER. SUPPLY AND INSTALL A #2 SOLID BARE TINNED CU GROUND WIRE TO TOWER. SUPPLY AND INSTALL COLD GALVANIZING TO TOWER AND GROUND BAR CLAMPS AFTER INSTALLATION.

ANTENNA GROUNDING PLAN | 5

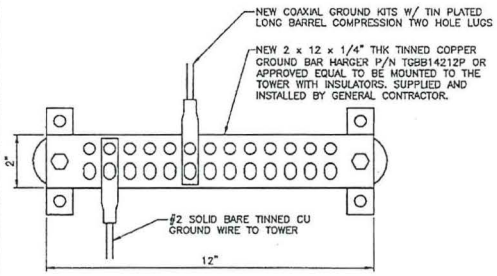

NOTES:

1. ALL HARDWARE 18-8 STAINLESS STEEL INCLUDING BELLVILLES, COAT ALL SURFACES WITH KOPR-SHIELD BEFORE MATING.
2. FOR GROUND BOND TO STEEL ONLY: INSERT A DRAGON TOOTH WASHER BETWEEN LUG AND STEEL, COAT ALL SURFACES WITH KOPR-SHIELD.
3. ALL HOLES ARE COUNTERSUNK 1/16".
4. CONTRACTOR TO USE A THIN COAT OF ANTI-CORROSION GREASE AT THESE CONNECTIONS.
5. INSTALLED WITHIN 12" OF END OF COAX JUMPER CONNECTION.
6. DIMPLE OR MECHANICAL CRIMP LUGS WILL NOT BE PERMITTED.

ANTENNA GROUND BAR (ONE PER SECTOR) | 3

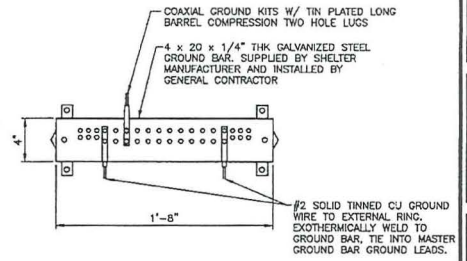

NOTES:

1. ALL HARDWARE 18-8 STAINLESS STEEL INCLUDING BELLVILLES, COAT ALL SURFACES WITH KOPR-SHIELD BEFORE MATING.
2. FOR GROUND BOND TO STEEL ONLY: INSERT A DRAGON TOOTH WASHER BETWEEN LUG AND STEEL, COAT ALL SURFACES WITH KOPR-SHIELD.
3. ALL HOLES ARE COUNTERSUNK 1/16".
4. CONTRACTOR TO USE A THIN COAT OF ANTI-CORROSION GREASE AT THESE CONNECTIONS.
5. INSTALLED AT 12" BELOW THE BOTTOM OF COAX ENTRY PORT.
6. DIMPLE OR MECHANICAL CRIMP LUGS WILL NOT BE PERMITTED.

EXTERIOR SHELTER GROUND BAR | 1

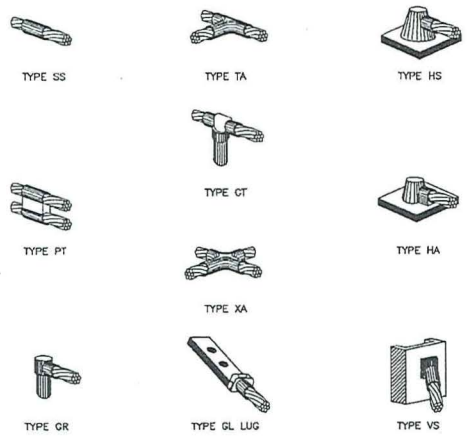

CADWELD DETAILS | 6

DETAIL NOT USED | 4

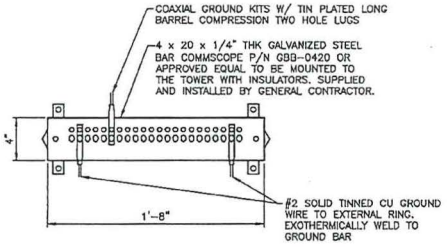

NOTES:

1. ALL HARDWARE 18-8 STAINLESS STEEL INCLUDING BELLVILLES, COAT ALL SURFACES WITH KOPR-SHIELD BEFORE MATING.
2. FOR GROUND BOND TO STEEL ONLY: INSERT A DRAGON TOOTH WASHER BETWEEN LUG AND STEEL, COAT ALL SURFACES WITH KOPR-SHIELD.
3. ALL HOLES ARE COUNTERSUNK 1/16".
4. CONTRACTOR TO USE A THIN COAT OF ZINC BASED ANTI-CORROSION GREASE AT THESE CONNECTIONS.
5. INSTALLED AT NO GREATER THAN 36" BELOW ICE BRIDGE.
6. DIMPLE OR MECHANICAL CRIMP LUGS WILL NOT BE PERMITTED.

LOWER TOWER GROUND BAR | 2

PLANS PREPARED FOR:

verizon wireless
16801 BUSH LAKE ROAD
BLOOMINGTON, MN 55438
PHONE: (952) 946-4700

PLANS PREPARED BY:

SSC
7803 Glenroy Road, Suite 102
Bloomington, Minnesota 55439
Phone: 952-831-0131
Fax: 913-438-7777

STRUCTURAL/CIVIL ENGINEER:

I hereby certify that this plan, specification, or report was prepared by me or under my direct supervision and that I am a duly Licensed Professional Engineer under the laws of the state of Minnesota.

Signature — MICHAEL L. OWENS Typed or Printed name
Date — 44052 Reg. NO.
Pages or sheets covered by this certification: Per Responsible Discipline. STRUCTURAL/CIVIL SC

ELECTRICAL ENGINEER:

I hereby certify that this plan, specification, or report was prepared by me or under my direct supervision and that I am a duly Licensed Professional Engineer under the laws of the state of Minnesota.

Signature — SHELTON D. KUSLING Typed or Printed name
Date 12-15-14 — 41757 Reg. NO.
Pages or sheets covered by this certification: Per Responsible Discipline. ELECTRICAL E

DRAWING NOTICE:

THIS DRAWING HAS NOT BEEN PUBLISHED AND IS THE SOLE PROPERTY OF SSC, INC. AND IS LENT TO THE BORROWER FOR THEIR CONFIDENTIAL USE ONLY, AND IN CONSIDERATION OF THE LOAN OF THIS DRAWING THE BORROWER PROMISES AND AGREES TO RETURN IT UPON REQUEST AND AGREES THAT IT WILL NOT BE REPRODUCED, COPIED, LENT OR OTHERWISE DISPOSED OF DIRECTLY OR INDIRECTLY, NOR USED FOR ANY PURPOSE OTHER THAN FOR WHICH IT IS FURNISHED.

SUBMITTALS

DESCRIPTION	DATE	BY	REV
ISSUED FOR REVIEW	09/27/13	DDS	A
ISSUED FOR REVIEW	12/09/13	JAG	B
ISSUED FOR REVIEW	12/17/13	PJW	C
ISSUED FOR CONSTRUCTION	09/12/14	PJW	0
REVISED SURVEY, FIBER EQUIPMENT	12/15/14	JWB	1

SITE NAME: MN07 LEON WILLMAR

SITE NUMBER: 265819

SITE ADDRESS: 515 2ND STREET SW
WILLMAR, MINNESOTA
56201

SHEET DESCRIPTION: GROUNDING DETAILS (2 OF 2)

SSC #:

SHEET NUMBER: G-4

GENERAL REQUIREMENTS SECTION 01 10 00

PART 1 GENERAL

1.1 INTENT

A. THESE SPECIFICATIONS AND CONSTRUCTION DRAWINGS DESCRIBE THE WORK TO BE DONE AND THE MATERIALS TO BE FURNISHED FOR CONSTRUCTION. PLANS ARE NOT TO BE SCALED.

B. THE DRAWINGS AND SPECIFICATIONS ARE INTENDED TO BE FULLY EXPLANATORY AND SUPPLEMENTARY, HOWEVER, SHOULD ANYTHING BE SHOWN, INDICATED OR SPECIFIED ON ONE AND NOT THE OTHER, IT SHALL BE DONE THE SAME AS IF SHOWN, INDICATED OR SPECIFIED IN BOTH.

C. THE INTENTION OF DOCUMENTS IS TO INCLUDE ALL LABOR AND MATERIALS REASONABLY NECESSARY FOR THE PROPER EXECUTION AND COMPLETION OF THE WORK AS STIPULATED IN THE CONTRACT.

D. CONFLICTS: THE CONTRACTOR SHALL BE RESPONSIBLE FOR VERIFICATION OF ALL MEASUREMENTS AT THE SITE BEFORE ORDERING MATERIALS OR DOING ANY WORK. NO COMPENSATION SHALL BE ALLOWED DUE TO DIFFERENCE BETWEEN ACTUAL DIMENSIONS AND THOSE ON THE DOCUMENTS. ANY DISCREPANCY SHALL BE REPORTED TO THE OWNER OR HIS AGENT FOR CONSIDERATION.

1.2 LICENSING REQUIREMENTS: THE CONTRACTOR IS RESPONSIBLE FOR PROCUREMENT AND MAINTAINING ALL APPLICABLE LICENSES AND BONDS.

1.3 STORAGE: ALL MATERIALS MUST BE STORED IN A LEVEL AND DRY FASHION THAT DOES NOT OBSTRUCT THE FLOW OF OTHER WORK. ANY STORAGE METHOD MUST MEET ALL RECOMMENDATIONS OF THE ASSOCIATED MANUFACTURER.

1.4 CLEAN UP: THE CONTRACTOR SHALL KEEP THE SITE FREE FROM ACCUMULATION OF WASTE MATERIALS OR RUBBISH AT ALL TIMES.

1.5 QUALITY ASSURANCE: ALL WORK SHALL BE IN ACCORDANCE WITH APPLICABLE LOCAL, STATE, AND FEDERAL REGULATIONS.

PART 2 PRODUCTS – NOT APPLICABLE TO THIS SECTION

PART 3 EXECUTION – NOT APPLICABLE TO THIS SECTION

END OF SECTION

CAST-IN-PLACE-CONCRETE SECTION 03 30 00

PART 1 GENERAL

1.1 SUMMARY

FURNISH AND INSTALL ALL CAST-IN-PLACE CONCRETE, REINFORCING AND ACCESSORIES, AS SPECIFIED HEREIN AND AS SHOWN ON THE DRAWINGS.

1.2 SUBMITTALS

A. PRODUCT DATA: SUBMIT MANUFACTURER'S PRODUCT DATA AND INSTALLATION INSTRUCTIONS FOR EACH MATERIAL AND PRODUCT USED.

B. SHOP DRAWINGS: SUBMIT SHOP DRAWINGS INDICATING MATERIAL CHARACTERISTICS, DETAILS OF CONSTRUCTION, CONNECTIONS, AND RELATIONSHIP WITH ADJACENT CONSTRUCTION.

SHOP DRAWINGS SHALL BE PREPARED AND STAMPED BY A QUALIFIED ENGINEER LICENSED IN THE JURISDICTION OF THE PROJECT.

C. MIX DESIGN: SUBMIT FOR APPROVAL MIX DESIGN PROPOSED FOR USE.

1.3 QUALITY ASSURANCE

A. COMPLY WITH GOVERNING CODES AND REGULATIONS. PROVIDE PRODUCTS OF ACCEPTABLE MANUFACTURERS, WHICH HAVE BEEN IN SATISFACTORY USE IN SIMILAR SERVICE FOR A MINIMUM OF THREE YEARS. USE EXPERIENCED INSTALLERS. DELIVER, HANDLE, STORE MATERIALS IN ACCORDANCE WITH MANUFACTURER'S INSTRUCTIONS.

B. TESTING: EMPLOY AN INDEPENDENT TESTING AGENCY ACCEPTABLE TO OWNER TO DESIGN CONCRETE MIXES AND TO PERFORM MATERIAL EVALUATION TESTS. PROVIDE 4 AND 28 DAY CYLINDER TESTS. COMPLY WITH ASTM C 143, C 173, C 31 AND C 39.

C. STANDARDS

1. ACI 301, SPECIFICATIONS FOR STRUCTURAL CONCRETE FOR BUILDINGS.

2. ACI 318, BUILDING CODE REQUIREMENTS FOR REINFORCED CONCRETE, AND CRSI MANUAL OF STANDARD PRACTICE.

PART 2 PRODUCTS

2.1 MATERIALS

A. MATERIALS SHALL CONFORM TO THE RESPECTIVE PUBLICATIONS AND OTHER REQUIREMENTS SPECIFIED HEREIN.

B. CEMENT: CEMENT SHALL CONFORM TO ASTM C150, TYPE 1. CEMENT MAY BE BAGGED OR BULK. CEMENT SHALL BE USED FORM ONLY ONE MILL THROUGHOUT PROJECT.

C. FINE AGGREGATE: FINE AGGREGATE SHALL CONFORM TO ASTM C33-08 AND SHALL BE UNIFORMLY GRADED, CLEAN, SHARP, WASHED MATERIAL OR CRUSHED SAND. FREE FROM ORGANIC IMPURITIES.

D. COURSE AGGREGATE: COURSE AGGREGATE SHALL CONFORM TO ASTM C33-08 AND SHALL BE NATURAL WASHED GRAVEL OR WASHED CRUSHED ROCK HAVING HARD, STRONG, DURABLE PIECES, FREE FORM ADHERENT COATINGS, THE MAXIMUM SIZE OF COARSE AGGREGATE SHALL BE 3/4" IN ACCORDANCE WITH THE REQUIREMENTS OF ASTM C33-08; GRADATION SIZE NO. 67.

E. WATER: WATER USED IN THE CONCRETE MIX SHALL BE POTABLE, CLEAN, AND FREE FROM OILS, ACIDS, SALTS, CHLORIDES, ALKALI, SUGAR, VEGETABLE, OR OTHER INJURIOUS SUBSTANCES.

F. REINFORCING STEEL: ALL BARS ARE TO BE NEW BILLET STEEL CONFORMING TO ASTM A615, GRADE 60. BENDING DETAILS RE TO CONFORM TO THE STANDARDS OF ACI 318.

G. FORMS: THE FORMS SHALL BE TRUE AND RIGID AND CONFORM TO SHAPE, LINE AND DIMENSIONS AS SHOWN ON THE DRAWINGS. ALL FORMS SHALL BE RIGIDLY CONSTRUCTED, BRACED AND TIED TO PREVENTS ANY DEFLECTION OR DISPLACEMENT DURING PLACING OF CONCRETE. ALL EXPOSED CORNERS AND EDGES SHALL HAVE 3/4" FILLETS. ALL JOINTS SHALL BE MORTAR TIGHT; OPEN JOINTS SHALL BE SEALED AS REQUIRED.

H. CONCRETE:

1. PROPORTIONING: CONCRETE SHALL CONFORM TO THE FOLLOWING:

a. CEMENT-6 SACKS PER CUBIC YARD, MINIMUM

b. WATER SHALL BE KEPT TO AN ABSOLUTE MINIMUM TO MAINTAIN SLUMP AS SPECIFIED

c. AGGREGATE; SAND FACTOR SHALL BE AS REQUIRED TO GIVE THE BEST WORKABLE MIX WITHIN THE RANGE OF 46 TO 52 PERCENT OF TOTAL AGGREGATE.

d. STRENGTH-4,000 PSI AT 28 DAYS, UNLESS NOTED OTHERWISE

e. ALL CONCRETE SHALL CONTAIN A WATER-REDUCING AGENT AND SHALL HAVE THREE (3) TO FIVE (5) PERCENT ENTRAINED AIR.

2.2 SLUMP:

A. THE MAXIMUM SLUMP SHALL NOT EXCEED 3" EXCEPT FOR CONCRETE TO BE PLACED IN FORMS 8" WIDE OR LESS, WHERE THE MAXIMUM SLUMP SHALL BE 4".

B. THE DETERMINATION OF SLUMP SHALL CONFORM TO ASTM C143.

2.3 MIXING:

THE CONTRACTOR SHALL USE READY-MIXED CONCRETE, MIXED AND DELIVERED IN CONFORMANCE WITH ASTM C94.

2.4 MIXTURES:

A. THE CONCRETE SHALL CONTAIN AND AIR-ENTRAINING ADMIXTURE COMPLYING WITH THE REQUIREMENTS OF ASTM C-260 AND ACI 212.1R AND A WATER-REDUCING ADMIXTURE COMPLYING WITH THE REQUIREMENTS OF ASTM C-494 AND ACI 212.1R. ADMIXTURES SHALL BE PURCHASE AND BATCHED IN LIQUID SOLUTION. THE USE OF CALCIUM CHLORIDE OR AN ADMIXTURE CONTAINING CALCIUM CHLORIDE IS PROHIBITED.

B. ADMIXTURES SHALL BE OF THE SAME MANUFACTURER TO ASSURE COMPATIBILITY.

C. ACCEPTABLE MANUFACTURERS ARE:

1. W.R. GRACE
2. SIKA GROUP
3. MASTER BUILDERS
4. EUCLID CHEMICAL CO

2.5 CURING COMPOUNDS

CURING COMPOUNDS SHALL CONFORM TO ASTM C309, TYPE 1, ID, CLASS A AND B AND ASTM C171 AS APPLICABLE

PART 3 EXECUTION

3.1 GENERAL

A. CONSTRUCT AND ERECT FORMWORK IN ACCORDANCE WITH ACI 301 ACI 347.

B. COLD-WEATHER CONCRETING SHALL BE IN ACCORDANCE WITH ACI 306.

C. HOT-WEATHER CONCRETING SHALL BE IN ACCORDANCE WITH ACI 305.

3.2 INSERTS, EMBEDDED COMPONENTS AND OPENINGS

A. CONTRACTOR SHALL CHECK ALL CIVIL, ARCHITECTURAL, STRUCTURAL, AND ELECTRICAL DRAWINGS FOR OPENINGS, SLEEVES, ANCHOR BOLTS, INSERTS AND OTHER ITEMS TO BE BUILT INTO THE CONCRETE WORK.

B. COORDINATE THE WORK OF OTHER SECTIONS IN FORMING AND SETTING OPENINGS, RECESSES, SLOTS, CHASES, ANCHORS, INSERTS AND OTHER ITEMS TO BE EMBEDDED.

C. EMBEDDED ITEMS SHALL BE SET ACCURATELY IN LOCATION, ALIGNMENT, ELEVATION, AND PLUMBNESS. LOCATE AND MEASURE FROM ESTABLISHED SURVEYED REFERENCE BENCHMARKS.

D. EMBEDDED ITEMS SHALL BE ANCHORED INTO PLACE AS REQUIRED TO PREVENT MOVEMENT DURING CONCRETE PLACEMENT AND CONSOLIDATION. COMPONENTS FORMING A PART OF A COMPLETE ASSEMBLY SHALL BE ALIGNED BEFORE ANCHORING. PROVIDE TEMPORARY BRACING, ANCHORAGE, AND TEMPLATES AS REQUIRED TO MAINTAIN THE SETTING AND ALIGNMENT.

3.3 REINFORCEMENT PLACEMENT:

A. REINFORCEMENT SHALL BE PLACED IN ACCORDANCE WITH CHECKED AND RELEASED DRAWINGS AND ACI 301 AND ACI 315; SECURELY WIRE-TIE REINFORCEMENT AT ALL INTERSECTIONS.

B. ACCURATELY POSITION, SUPPORT AND SECURE REINFORCEMENT AGAINST DISPLACEMENT FROM FORMWORK CONSTRUCTION OR CONCRETE PLACEMENT AND CONSOLIDATION. REINFORCING SHALL BE SUPPORTED ON METAL CHAIRS, RUNNERS, BOLSTERS, SPACERS, AND HANGERS.

C. SPLICES OF REINFORCING BARS SHALL BE CLASS B UNLESS SHOWN OTHERWISE. SPLICES SHALL BE STAGGERED. FULL DEVELOPMENT LENGTH SHALL BE PROVIDED ACROSS JOINTS.

D. LOCATE REINFORCING TO PROVIDE CONCRETE COVER AND SPACING SHOWN ON THE DRAWINGS. MINIMUM COVER SHALL BE AS REQUIRED BY ACI 318.

E. WELDING OF AND TO ANY REINFORCING MATERIALS INCLUDING TACK WELDING OF CROSSING BARS IS STRICTLY PROHIBITED. BARS SHALL BE FREE OF FLAKEY OR SCALEY RUST AT THE TIME THE CONCRETE IS PLACED.

3.4 CONCRETE PLACEMENT:

A. PRIOR TO PLACING CONCRETE, FORMS AND REINFORCEMENT SHALL BE THOROUGHLY INSPECTED. ALL WOOD CHIPS, DIRT, ETC., AS WELL AS ALL TEMPORARY BRACING, TIES, AND CLEATS REMOVED, AND ALL OPENINGS FOR UTILITIES PROPERLY BOXED, ALL FORMS SHALL BE PROPERLY SECURED IN THEIR CORRECT POSITION AND MADE TIGHT. ALL REINFORCING AND EMBEDDED ITEMS SHALL BE SECURED IN THEIR PROPER LOCATIONS.. ALL OLD AND DRY CONCRETE AN DIRT SHALL BE CLEANED AND ALL STANDING WATER AND OTHER FOREIGN MATTER REMOVED.

B. PLACING CONCRETE SHALL BE IN ACCORDANCE WITH ACI 301 AND ACI 304 AND SHALL BE CARRIED OUT AT SUCH A RATE THAT THE CONCRETE PREVIOUSLY PLACED IS STILL PLASTIC AND INTEGRATED WITH THE FRESHLY PLACE CONCRETE. CONCRETING, ONCE STARTED, SHALL BE CARRIED ON AS A CONTINUOUS OPERATION UNTIL THE SECTION IS COMPLETED. NO COLD JOINTS SHALL BE ALLOWED.

C. CONSTRUCTION JOINTS: USE KEYWAYS, CONTINUE REINFORCEMENT THROUGH JOINT.

D. EXPANSION JOINTS: FOR EXTERIOR WORK, LOCATE AT 30' O.C. MAXIMUM, AT APPROVED LOCATIONS. PROVIDE SMOOTH DOWELS ACROSS JOINT WHICH PERMIT 1" HORIZONTAL MOVEMENT AND NO VERTICAL SHEAR MOVEMENT.

E. ISOLATION JOINTS: PROVIDE BETWEEN SLABS AND VERTICAL ELEMENTS SUCH AS COLUMNS AND STRUCTURAL WALLS.

F. CONTROL JOINTS: PROVIDE SAWN OR TOOLED JOINTS OR REMOVABLE INSERT STRIPS; DEPTH EQUAL TO 1/4" SLAB THICKNESS. SPACING SHALL BE AS REQUIRED AND APPROVED.

G. ALL CONCRETE SHALL BE THOROUGHLY CONSOLIDATED AND COMPACTED BY VIBRATION, SPADING, RODDING, OR FORKING DURING THE OPERATION OF PLACING AND DEPOSITING IN ACCORDANCE WITH ACI 309. THE CONCRETE SHALL BE WORKED AROUND REINFORCEMENT, EMBEDDED ITEMS, AND INTO THE CORNERS OF THE FORMS SO AS TO ELIMINATE ALL AIR AND STONE POCKETS.

3.5 FINISHING:

A. FINISHING OF ALL SLABS SHALL BE IN ACCORDANCE WITH ACI 302.1; SECTION 7.2 WITH A MINIMUM OF THREE TROWELINGS.

1. INTERIOR SLAB FINISH TOLERANCE AS MEASURED IN ACCORDANCE WITH ASTM E 1155 SHALL HAVE AN OVERALL TEST F NUMBER FOR FLATNESS, FF=20 AND FOR LEVEL, FL=15. THE MINIMUM LOCAL NUMBER FOR FLATNESS, FF=15 AND FOR LEVEL, FL=10.

2. EXTERIOR SLAB FINISH SHALL BE FLAT (FF=20) AND SHALL BE SLOPED A MINIMUM OF 1/8" PER FOOT TO A MAXIMUM OF 1/4" PER FOOT TO PREVENT PONDING WATER.

B. SURFACES OF SLABS SHALL RECEIVE TWO COATS OF CLEAR SEALER/HARDNER.

C. ABOVE GRADE WALL SURFACES SHALL HAVE A SMOOTH FORM FINISH AS DEFINED IN CHAPTER 10 OF ACI 301.

3.6 CURING:

A. FRESHLY DEPOSITED CONCRETE SHALL BE PROTECTED FROM PREMATURE DRYING AND EXCESSIVELY HOT OR COLD TEMPERATURES AND SHALL BE MAINTAINED WITH MINIMAL MOISTURE LOSS AT A RELATIVELY CONSTANT TEMPERATURE FOR A PERIOD OF TIME NECESSARY FOR THE HYDRATION OF THE CEMENT AND PROPER HARDENING OF THE CONCRETE.

B. CURING SHALL IMMEDIATELY FOLLOW THE FINISH OPERATION. CONCRETE SHALL BE KEPT CONTINUOUSLY MOIST ATE LEAST OVERNIGHT, IMMEDIATELY FOLLOWING THE INITIAL CURING. BEFORE THE CONCRETE HAS DRIED, ADDITIONAL CURING SHALL BE ACCOMPLISHED BY ONE OF THE FOLLOWING MATERIALS OR METHODS:

1. PONDING OR CONTINUOUS SPRINKLING

2. ABSORPTIVE MAT OR FABRIC KEPT CONTINUOUSLY WET

3. NON-ABSORPTIVE FILM (POLYETHYLENE) OVER A PREVIOUSLY SPRINKLED SURFACE

4. SAND OR OTHER COVERING KEPT CONTINUOUSLY WET

5. CONTINUOUS STEAM (NOT EXCEEDING 150 DEGREES F) OR VAPOR MIST BATH.

6. SPRAYED-ON CURING COMPOUND APPLIED IN TWO COATES, SPRAYED IN PERPENDICULAR DIRECTIONS.

C. THE FINAL CURING SHALL CONTINUE UNTIL THE CUMULATIVE NUMBER OF DAYS OR FRACTION THEREOF, NOT NECESSARILY CONSECUTIVE, DURING WHICH TEMPERATURE OF THE AIR IN CONTACT WITH CONCRETE IS ABOVE 50 F HAS TOTALED SEVEN (7) DAYS. CONCRETE SHALL NOT BE PERMITTED TO FREEZE DURING THE CURING PERIOD. RAPID DRYING AT THE END OF THE CURING PERIOD SHALL BE PREVENTED.

END OF SECTION

PLANS PREPARED FOR:

verizon wireless
10801 BUSH LAKE ROAD
BLOOMINGTON, MN 55438
PHONE: (952) 946-4700

PLANS PREPARED BY:

7803 Glenroy Road, Suite 102
Bloomington, Minnesota 55439
Phone: 952-831-0131
Fax: 913-438-7777
SSC

STRUCTURAL/CIVIL ENGINEER:

I hereby certify that this plan, specification, or report was prepared by me or under my direct supervision and that I am a duly Licensed Professional Engineer under the laws of the state of Minnesota.

Signature: MICHAEL L. OWENS
Typed or Printed name
Date: 12/15/14
Reg. NO.: 44952
Pages or sheets covered by this certification:
Per Responsible Discipline: STRUCTURAL/CIVIL 90

ELECTRICAL ENGINEER:

I hereby certify that this plan, specification, or report was prepared by me or under my direct supervision and that I am a duly Licensed Professional Engineer under the laws of the state of Minnesota.

Signature: SHELTON D. KEISLING
Typed or Printed name
Date: 47787
Reg. NO.:
Pages or sheets covered by this certification:
Per Responsible Discipline: ELECTRICAL E

DRAWING NOTICE:

THIS DRAWING HAS NOT BEEN PUBLISHED AND IS THE SOLE PROPERTY OF SSC, INC. AND IS LENT TO THE BORROWER FOR THEIR CONFIDENTIAL USE ONLY, AND IN CONSIDERATION OF THE LOAN OF THIS DRAWING,THE BORROWER PROMISES AND AGREES TO RETURN IT UPON REQUEST AND AGREES THAT IT WILL NOT BE REPRODUCED, COPIED, LENT OR OTHERWISE DISPOSED OF DIRECTLY OR INDIRECTLY, NOR USED FOR ANY PURPOSE OTHER THAN FOR WHICH IT IS FURNISHED.

SUBMITTALS

DESCRIPTION	DATE	BY	REV
ISSUED FOR REVIEW	09/27/13	DDG	A
ISSUED FOR REVIEW	12/09/13	JAB	B
ISSUED FOR REVIEW	12/17/13	PJW	C
ISSUED FOR CONSTRUCTION	09/12/14	PJW	0
REVISED SURVEY, FIBER EQUIPMENT	12/15/14	JAB	1

SITE NAME:

MN07 LEON WILLMAR

SITE NUMBER:

265819

SITE ADDRESS:

515 2ND STREET SW
WILLMAR, MINNESOTA
56201

SHEET DESCRIPTION:

SPECIFICATIONS (1 OF 7)

SSC #:

SHEET NUMBER:

SP-1

UNIT MASONRY SECTION 04 20 00

PART 1 GENERAL

1.1 SUMMARY

A. PROVIDE UNIT MASONRY CONSTRUCTION AS INDICATED ON THE DRAWINGS.

PART 2 PRODUCTS

2.1 MATERIALS

A. CLAY MASONRY UNITS:

1. APPLICATION: BRICK AND CONCRETE BLOCK CAVITY WALLS.

2. SIZE: STANDARD MODULAR, 3-5/8 INCHES THICK BY 2-1/4 INCHES HIGH BY 7-5/8 INCHES LONG OR AS INDICATED ON DRAWINGS.

3. TYPE: ASTM C 216, TYPE FBS, FOR GENERAL EXPOSED USE, OR AS INDICATED ON DRAWINGS. GRADE SHALL BE SW, UNLESS NOTED OTHERWISE ON DRAWINGS.

4. SPECIAL SHAPES: AS REQUIRED BY BUILDING CONFIGURATION. OR AS INDICATED ON DRAWINGS

5. BOND PATTERN: RUNNING BOND

B. CONCRETE MASONRY UNITS:

1. CONCRETE MASONRY UNITS: HOLLOW, LOAD-BEARING, NORMAL WEIGHT, ASTM C 90, GRADE N, TYPE 1, 1500 F'M COMPRESSIVE STRENGTH:

MEDIUM WEIGHT

2. SIZE: 7-5/8 " HIGH BY 15-5/8 LONG BY EITHER 7-5/8" OR 11-5/8" THICK OR AS INDICATED ON DRAWINGS.

3. SPECIAL SHAPES: AS REQUIRED BY BUILDING CONFIGURATION.

4. BOND PATTERN: RUNNING BOND UNLESS NOTED OR SHOWN DIFFERENTLY ON DRAWINGS.

C. LIMESTONE / PRECAST TRIM UNITS:

1. GRADE AND COLOR: AS SHOWN ON DRAWINGS

2. FINISH: AS IDENTIFIED ON DRAWINGS

D. MORTAR AND GROUT FOR BRICK AND CONCRETE MASONRY UNIT ASSEMBLIES:

1. MORTAR MIX: ASTM C 270, TYPE S, FOR REINFORCED MASONRY, MASONRY BELOW GRADE AND MASONRY IN CONTACT WITH EARTH AND ASTM C 270, TYPE N, FOR ABOVE-GRADE LOADBEARING AND NONLOADBEARING WALLS. PORTLAND CEMENT SHALL CONFORM TO ASTM C150, TYPE 1. MASONRY CEMENT SHALL CONFORM TO ASTM C91. FINE AGGREGATE SHALL CONFORM TO ASTM C144.

2. MORTAR COLOR: NATURAL COLOR UNLESS NOTED OTHERWISE ON DRAWINGS.

3. GROUT: ALL GROUT FOR FILLING BOND BEAMS AND REINFORCED CELLS SHALL CONFORM TO NON-AIR ENTRAINED GROUT PER ASTM C476 WITH PORTLAND CEMENT PER ASTM C150, TYPE 1, AND INE AND COARSE AGGREGATE PER ASTM C404.

E. REINFORCING STEEL: 1. REINFORCING BARS: ASTM A 615, GRADE 60. 2. WELDED WIRE FABRIC: ASTM A 185, PLAIN.

F. REINFORCING: WELDED WIRE WITH DEFORMED SIDE RODS.

1. STEEL WIRE: 9 GAUGE (.1875 INCH) GALVANIZED STEEL.

2. TRUSS TYPE

C. TIES AND ANCHORS:

1. BENT WIRE TIES: GALVANIZED STEEL.

2. RIGID ANCHORS: GALVANIZED STEEL STRAPS.

PART 3 EXECUTION

3.1 INSTALLATION

A. INSTALLATION OF MASONRY ASSEMBLIES:

1. COMPLY WITH PCA RECOMMENDED PRACTICES FOR LAYING CONCRETE BLOCK, BRICK INSTITUTE OF AMERICA BIA TECH NOTES, AND NCMA TEK BULLETINS.

2. COMPLY WITH COLD WEATHER AND WARM WEATHER PROTECTION PROCEDURES AS RECOMMENDED IN BIA TECH NOTES.

END OF SECTION

STRUCTURAL STEEL FRAMING SECTION 05 12 00

PART 1 GENERAL

1.1 SUMMARY

PROVIDE STRUCTURAL STEEL ASSEMBLIES, FABRICATIONS, AND ERECTION OF STEEL AND OTHER ITEMS AS SHOWN ON THE DRAWINGS OR REQUIRED FOR A COMPLETE INSTALLATION.

1.2 QUALITY ASSURANCE

A. COMPLY WITH ALL APPLICABLE GOVERNING CODES AND REGULATIONS. PROVIDE PRODUCTS OF ACCEPTABLE MANUFACTURERS, WHICH HAVE BEEN IN SATISFACTORY USE IN SIMILAR SERVICE FOR THREE YEARS. USE EXPERIENCED INSTALLERS. DELIVER, HANDLE, AND STORE MATERIALS IN ACCORDANCE WITH MANUFACTURER'S INSTRUCTIONS.

B. STANDARDS: AISC, CODE OF STANDARD PRACTICE FOR STEEL BUILDINGS AND BRIDGES, AND APPLICABLE REGULATIONS.

C. ARCHITECTURALLY EXPOSED STRUCTURAL STEEL: COMPLY WITH FABRICATION REQUIREMENTS, INCLUDING TOLERANCE LIMITS, AND INSTALLATION TOLERANCES OF AISC'S "CODE OF STANDARD PRACTICE FOR STEEL BUILDINGS AND BRIDGES" FOR STRUCTURAL STEEL.

D. ERECTION TOLERANCES: AISC STANDARDS.

1.3 SUBMITTALS:

A. SUBMIT FABRICATION AND ERECTION DRAWINGS SHOWING ALL DETAILS, CONNECTIONS, MATERIAL DESIGNATIONS, AND ALL TOP OF STEEL ELEVATIONS TO ENGINEER FOR APPROVAL:

B. WELDERS SHALL BE QUALIFIED AS PRESCRIBED IN AWS D1.1. PART 2 PRODUCTS

2.1 MATERIALS

A. STRUCTURAL STEEL:

1. STRUCTURAL STEEL SHAPES, PLATES, AND BARS: ASTM A 572, ASTM A-36.

2. COLD-FORMED STEEL TUBING: ASTM A 500, GRADE B.

3. STEEL PIPE: ASTM A 53, TYPE E OR S, GRADE B; OR ASTM A 501.

4. ANCHOR BOLTS: ASTM A 307, NON-HEADED TYPE

5. COMMON (MACHINE) BOLTS SHALL CONFORM TO ASTM A307 GRADE A AND NUTS TO ASTM A563. ONE COMMON BOLT ASSEMBLY SHALL CONSIST OF A BOLT, A HEAVY HEX NUT, AND A HARDENED WASHER. BOLTS AND NUTS TO BE HOT DIPPED GALVANIZED PER ASTM A153 IF EXPOSED.

6. HIGH STRENGTH BOLTS SHALL CONFORM TO ASTM A325 OR A490, AS APPLICABLE. ONE HIGH STRENGTH BOLT ASSEMBLY SHALL CONSIST OF A HEAVY HEX STRUCTURAL BOLT, A HEAVY HEX NUT, AND A HARDENED WASHER CONFORMING TO ASTM F436. THE HARDENED WASHER SHALL BE INSTALLED AGAINST THE ELEMENT TURNED IN TIGHTENING. BOLTS AND NUTS TO BE HOT-DIP GALVANIZED PER ASTM A153 IF EXPOSED.

7. AUXILIARY MATERIALS:

a. DIRECT TENSION INDICATORS: ASTM A 959

b. ELECTRODES FOR WELDING: AWS CODE: E70XX

8. GROUTS:

a. CEMENT GROUT: PORTLAND CEMENT, SAND.

b. METALLIC SHRINKAGE-RESISTANT GROUT: PREMIXED FERROUS AGGREGATE GROUTING COMPOUND ASTM C 1107.

c. NONMETALLIC SHRINKAGE-RESISTANT GROUT: PREMIXED NONMETALLIC GROUTING COMPOUND, ASTM C 1107.

B. SHOP PAINTING

1. GENERAL: ALL STRUCTURAL STEEL MATERIALS EXPOSED TO THE ELEMENTS SHALL BE HOT DIPPED GALVANIZED PER ASTM 123. ALL OTHER STRUCTURAL STEEL SHALL BE SHOP PRIMED.

a. DO NOT PAINT SURFACES TO BE WELDED OR HIGH-STRENGTH BOLTED WITH FRICTION-TYPE CONNECTIONS.

b. DO NOT PAINT SURFACES SCHEDULED TO RECEIVE SPRAYED-ON FIREPROOFING.

2. STRUCTURAL STEEL FACTORY APPLIED PRIMER PAINT: (FOR NON-GALVANIZED MATERIALS). STANDARD RED OXIDE, LEAD AND CHROMATE-FREE, NON-ASHPHALTIC, RUST-INHIBITING PRIMER COMPLYING WITH FS TT-P-664

3. ZINC COATED (HOT DIP GALVANIZED) PER ASTM A123 (AFTER FABRICATION): TOUCH_UP AFTER ERECTION: CLEAN AND WIRE BRUSH ANY ABRADED AND OTHER SPOTS WORN THROUGH ZINC COATING, INCLUDING THREADED PORTIONS OF BOLTS AND WELDS AND TOUCH_UP WITH GALVANIZING REPAIR PAINT.

C. FIELD PAINTING: REPAIR / TOUCH UP OF DAMAGED GALVANIZED OR PRIMED SURFACES:

a. FOR GALVANIZED SURFACES, USE ORGANIC ZINC-RICH COATING MATCHING THE APPEARANCE OF HOT-DIP GALVANIZING CONTAINING AT LEAST 65% - 69% OR ABOVE 92% METALLIC ZINC. BY WEIGHT IN THE DRY FILM, MEETING THE PERFORMANCE REQUIREMENTS OF THE FOLLOWING: ASTM A 780-01, DOD-P-21035B, MIL-P-46105, AND SSPC PS-12, PS-12.01, PS-20, PS-22, PS-29 AND PS-30

b. FOR PRIMED SURFACES, CLEAN ALL SURFACES AND RE-PRIME PER RECOMMENDATIONS OF ORIGINAL PRIME MATERIALS.

PART 3 EXECUTION

3.1 FABRICATION

A. SHOP FABRICATE AND ASSEMBLE MATERIALS AS SPECIFIED HEREIN:

1. FABRICATE ITEMS IN ACCORDANCE WITH THE AISC-ASD SPECIFICATIONS

2. ALL EXPOSED STRUCTURAL STEEL SHALL BE HOT DIP GALVANIZED PER ASTM A123

3. PROPERLY MARK AND MATCH-MARK MATERIALS FOR FIELD ASSEMBLY AND FOR IDENTIFICATION AS TO LOCATION FOR WHICH INTENDED

4. FABRICATE AND DELIVER IN A SEQUENCE WHICH WILL EXPEDITE ERECTION AND MINIMIZE FIELD HANDLING OF MATERIALS.

5. PROVIDE FINISH SURFACE OF MEMBERS EXPOSED IN THE FINAL STRUCTURE FREE FROM MARKINGS, BURRS, AND OTHER DEFECTS.

B. CONNECTIONS

1. PROVIDE BOLTS AND WASHERS OF TYPES AND SIZE REQUIRED FOR COMPLETION OF FIELD ERECTION. USE ¾ INCH DIAMETER A325 N BOLTS UNLESS NOTED OTHERWISE.

2. INSTALL HIGH STRENGTH THREADED FASTENERS IN ACCORDANCE WITH RCSC "SPECIFICATIONS FOR STRUCTURAL JOINTS" USING ASTM A325 N OR ASTM A490 BOLTS."

3. WELDED CONSTRUCTION SHALL COMPLY WITH AWS D1.1 FOR PROCEDURES, APPEARANCE, QUALITY OF WELDS, AND METHODS USED IN CORRECTING WELDED WORK.

4. THE FABRICATOR SHALL FURNISH AND INSTALL ERECTION CLIPS FOR FIT-UP OF WELDED CONNECTIONS.

5. DOUBLE ANGLE MEMBERS SHALL HAVE WELDED FILLERS SPACED IN ACCORDANCE WITH CHAPTER E4 OF THE AISC-ASD SPECIFICATION.

6. GUSSET AND STIFFENER PLATES SHALL BE 3/8 INCH THICK MINIMUM.

3.2 INSTALLATION

A. INSTALLATION OF STRUCTURAL STEEL SHALL COMPLY WITH AISC "CODE OF STANDARD PRACTICE".

B. STRUCTURAL FIELD WELDING SHALL BE DONE BY THE ELECTRIC SUBMERGED OR SHIELDED METAL ARC PROCESS. WELDED CONSTRUCTION SHALL COMPLY WITH AWS D1.1

C. PROVIDE TEMPORARY SHORING AND BRACING WITH CONNECTIONS OF SUFFICIENT STRENGTH TO BEAR IMPOSED LOADS. REMOVE WHEN FINAL CONNECTIONS HAVE BEEN MADE.

D. ALIGN AND ADJUST MEMBERS AS REQUIRED PRIOR TO FINAL INSPECTION.

E. INSTALL AND FULLY TENSION HIGH STRENGTH THREADED FASTENERS IN ACCORDANCE WITH RCSC, "SPECIFICATIONS FOR STRUCTURAL JOINTS" USING ASTM A 325 N OR ASTM A 490 BOLTS."

3.3 FINAL INSPECTION

A. CLEAN ALL SURFACES UPON COMPLETION OF WORK

B. COMPLY WITH AISC CODES AND SPECIFICATIONS, AND WITH AWS "STRUCTURAL WELDING CODE".

C. TOUCH-UP FIELD WELDS AND ABRADED AREAS AS REQUIRED.

END OF SECTION

PLANS PREPARED FOR:

verizon wireless
10801 BUSH LAKE ROAD
BLOOMINGTON, MN 55438
PHONE: (952) 946-4700

PLANS PREPARED BY:

SSC
7803 Glenroy Road, Suite 102
Bloomington, Minnesota 55439
Phone: 952-831-0131
Fax: 913-438-7777

STRUCTURAL/CIVIL ENGINEER:

I hereby certify that this plan, specification, or report was prepared by me or under my direct supervision and that I am a duly Licensed Professional Engineer under the laws of the state of Minnesota.

Signature: MICHAEL L OMENS
Typed or Printed name
Date: 12/17/14
Reg. NO.: 44052
Pages or sheets covered by this certification:
Per Responsible Discipline: STRUCTURAL/CIVIL SC

ELECTRICAL ENGINEER:

I hereby certify that this plan, specification, or report was prepared by me or under my direct supervision and that I am a duly Licensed Professional Engineer under the laws of the state of Minnesota.

Signature: SHELTON D. KETELING
Typed or Printed name
Date:
Reg. NO.: 47757
Pages or sheets covered by this certification:
Per Responsible Discipline: ELECTRICAL E

DRAWING NOTICE:

THIS DRAWING HAS NOT BEEN PUBLISHED AND IS THE SOLE PROPERTY OF SSC, INC. AND IS LENT TO THE BORROWER FOR THEIR CONFIDENTIAL USE ONLY, AND IN CONSIDERATION OF THE LOAN OF THIS DRAWING, THE BORROWER PROMISES AND AGREES TO RETURN IT UPON REQUEST AND AGREES THAT IT WILL NOT BE REPRODUCED, COPIED, LENT OR OTHERWISE DISPOSED OF DIRECTLY OR INDIRECTLY, NOR USED FOR ANY PURPOSE OTHER THAN FOR WHICH IT IS FURNISHED.

SUBMITTALS

DESCRIPTION	DATE	BY	REV
ISSUED FOR REVIEW	09/27/13	DDS	A
ISSUED FOR REVIEW	12/09/13	JMB	B
ISSUED FOR REVIEW	12/17/13	PJW	C
ISSUED FOR CONSTRUCTION	09/12/14	PJW	0
REVISED SURVEY, FIBER EQUIPMENT	12/15/14	JMB	1

SITE NAME:

MN07 LEON WILLMAR

SITE NUMBER:

265819

SITE ADDRESS:

515 2ND STREET SW
WILLMAR, MINNESOTA
56201

SHEET DESCRIPTION:

SPECIFICATIONS (2 OF 7)

SSC #:

SHEET NUMBER:

SP-2

COMMUNICATIONS/ANTENNA'S SECTION 27 00 00

GENERAL:

1.1 WORK INCLUDED

A. ANTENNA AND COAXIAL CABLES ARE FURNISHED BY OWNER UNDER SEPARATE CONTRACT. THE CONTRACTOR SHALL ASSIST ANTENNA INSTALLATION CONTRACTOR IN TERMS OF COORDINATION AND SITE ACCESS. ERECTION SUBCONTRACTOR SHALL BE RESPONSIBLE FOR THE PROTECTION OF PERSONNEL AND PROPERTY FROM HAZARDOUS EXPOSURE TO OVERHEAD DANGER.

B. INSTALL ANTENNAS AS INDICATED ON DRAWINGS AND OWNER SPECIFICATIONS.

C. INSTALL GALVANIZED STEEL ANTENNA MOUNTS AS INDICATED ON DRAWINGS.

D. INSTALL FURNISHED GALVANIZED STEEL WAVEGUIDE LADDER AS INDICATED ON DRAWINGS.

E. THE CONTRACTOR SHALL PROVIDE FREQUENCY DOMAIN REFLECTOMETER (FDR) TEST RESULTS TO THE CONSTRUCTION MANAGER AND OWNER WITHIN ONE WEEK OF COMPLETION.

F. INSTALL COAXIAL CABLES AND TERMINATORS BETWEEN ANTENNAS AND EQUIPMENT PER MANUFACTURER'S RECOMMENDATIONS. WEATHERPROOF ALL CONNECTORS BETWEEN THE ANTENNA AND EQUIPMENT PER MANUFACTURER'S REQUIREMENTS. TERMINATE ALL COAXIAL CABLE THREE (3) FEET IN EXCESS OF ENTRY PORT LOCATION UNLESS OTHERWISE STATED.

G. ANTENNA AND COAXIAL CABLE GROUNDING:

1. ALL COAXIAL CABLE GROUNDING CONNECTIONS ARE TO BE WEATHER SEALED WITH ANDREW CONNECTOR/SPLICE WEATHERPROOFING KITS OR EQUIVALENT.

2. ALL COAXIAL CABLE GROUNDING KITS ARE TO BE INSTALLED ON STRAIGHT RUNS OF COAXIAL CABLE (NOT WITHIN BENDS)

1.2 RELATED WORK

A. FURNISH THE FOLLOWING WORK AS SPECIFIED UNDER CONSTRUCTION DOCUMENTS, BUT COORDINATE WITH OTHER TRADES PRIOR TO BID:

1. FLASHING OF OPENING INTO OUTSIDE WALLS.

2. SEAL AND CAULK ALL OPENINGS.

3. PAINTING.

4. CUTTING AND PATCHING.

1.3 REQUIREMENTS OF REGULATOR AGENCIES

A. FURNISH UL LISTED EQUIPMENT WHERE SUCH LABEL IS AVAILABLE, INSTALL IN CONFORMANCE WITH UL STANDARDS WHERE APPLICABLE.

B. INSTALL ANTENNA, ANTENNA CABLES, AND GROUNDING SYSTEM IN ACCORDANCE WITH DRAWINGS AND SPECIFICATIONS IN EFFECT AT PROJECT LOCATION AND RECOMMENDATIONS OF STATE AND LOCAL BUILDING CODES, AND ANY SPECIAL CODES HAVING JURISDICTION OVER SPECIFIC PORTIONS OF WORK. THIS INCLUDES BUT IS NOT LIMITED TO THE FOLLOWING:

1. TIA – TELECOMMUNICATIONS INDUSTRY ASSOCIATION –222; STRUCTURAL STANDARDS FOR STEEL ANTENNA TOWERS AND ANTENNA SUPPORTING STRUCTURES.

2. FAA – FEDERAL AVIATION ADMINISTRATION ADVISORY CIRCULAR AC 70/7460–1K, OBSTRUCTION MARKING AND LIGHTING.

3. FCC – FEDERAL COMMUNICATIONS COMMISSION RULES AND REGULATIONS OBSTRUCTION MARKING AND LIGHTING SPECIFICATIONS FOR ANTENNA STRUCTURES AND HIGH INTENSITY OBSTRUCTION LIGHTING SPECIFICATIONS FOR ANTENNA STRUCTURES.

4. AISC – AMERICAN INSTITUTE OF STEEL CONSTRUCTION SPECIFICATION FOR STRUCTURAL JOINTS USING ASTM A325 OR A490 BOLTS.

5. NEC – NATIONAL ELECTRICAL CODE FOR TOWER LIGHTING KITS.

6. UL – UNDERWRITERS LABORATORIES APPROVED ELECTRICAL PRODUCTS.

7. IN ALL CASES, THE FAA RULES AND THE FCC RULES ARE APPLICABLE AND IN THE EVENT OF CONFLICT, SUPERSEDE ANY OTHER STANDARDS OR SPECIFICATIONS.

8. LIFE SAFETY CODE NFPA, LATEST EDITION.

SITE CLEARING / EROSION CONTROL SECTION 31 00 00

PART 1 GENERAL

1.1 SUMMARY

A. PROVIDE SITE–CLEARING AS REQUIRED TO COMPLETE WORK AS SHOWN ON CONTRACT DOCUMENTS INCLUDING CLEARING, GRUBBING, STRIPPING, EROSION AND SILTATION CONTROL, AND PROTECTION OF LANDSCAPE MATERIALS DESIGNATED TO BE PROTECTED DURING CONSTRUCTION.

1.2 QUALITY ASSURANCE

A. COMPLY WITH GOVERNING CODES AND REGULATIONS.

B. SITE PROTECTION: PROVIDE ALL NECESSARY JOB SITE MAINTENANCE FROM COMMENCEMENT OF WORK UNTIL COMPLETION OF THE SUBCONTRACT

C. AVOID DAMAGE TO THE SITE AND TO EXISTING FACILITIES, STRUCTURES, TREES, AND SHRUBS DESIGNATED TO REMAIN. TAKE PROTECTIVE MEASURES TO PREVENT EXISTING FACILITIES THAT ARE NOT DESIGNATED FOR REMOVAL FROM BEING DAMAGED BY THE WORK.

PART 2 PRODUCTS

2.1 MATERIALS

A. TREE PROTECTION, EROSION CONTROL, SILTATION CONTROL, AND DUST CONTROL MATERIALS SUITABLE FOR SITE CONDITIONS.

PART 3 EXECUTION

3.1 SITE CLEARING OPERATIONS

A. PROTECTION OF EXISTING TREES, VEGETATION, LANDSCAPING, AND SITE IMPROVEMENTS NOT SCHEDULED FOR CLEARING WHICH MIGHT BE DAMAGED BY CONSTRUCTION ACTIVITIES.

B. TRIMMING OF EXISTING TREES AND VEGETATION AS RECOMMENDED BY ARBORIST FOR PROTECTION DURING CONSTRUCTION ACTIVITIES.

C. CLEARING AND GRUBBING OF STUMPS AND VEGETATION, AND REMOVAL AND DISPOSAL OF DEBRIS, RUBBISH, DESIGNATED TREES, AND SITE IMPROVEMENTS.

D. TOPSOIL STRIPPING AND STOCKPILING.

E. TEMPORARY EROSION CONTROL, SILTATION CONTROL, AND DUST CONTROL.

F. TEMPORARY PROTECTION OF ADJACENT PROPERTY, STRUCTURES, BENCHMARKS, AND MONUMENTS.

G. WATERING OF TREES AND VEGETATION DURING CONSTRUCTION ACTIVITIES.

H. REMOVAL AND LEGAL DISPOSAL OF CLEARED MATERIALS.

I. MAINTAIN ALL EXISTING FENCING AND GATES TO MAINTAIN A SECURE SITE AT ALL TIMES.

J. PROVIDE AND MAINTAIN ALL TEMPORARY FENCING, BARRICADES, WARNING SIGNALS AND SIMILAR DEVICES NECESSARY TO PROTECT LIFE AND PROPERTY DURING THE ENTIRE PERIOD OF CONSTRUCTION. REMOVE ALL SUCH DEVICES UPON COMPLETION OF THE WORK.

3.2 CLEARING

A. PREVENT DAMAGE TO EXISTING IMPROVEMENTS INDICATED TO REMAIN, INCLUDING ON AND OFF SITE. PROTECT EXISTING TREES AND VEGETATION INDICATED TO REMAIN. DO NOT STOCKPILE MATERIALS AND RESTRICT TRAFFIC WITHIN DRIP LINE OF EXISTING TREES TO REMAIN OR THAT INTERFERE WITH ACCESS TO SITE. PROVIDE AND MAINTAIN TEMPORARY GUARDS TO ENCIRCLE TREES OR GROUPS OF TREES TO REMAIN; OBTAIN APPROVAL BEFORE BEGINNING WORK.

B. WATER VEGETATION AS REQUIRED TO MAINTAIN HEALTH. COVER TEMPORARILY EXPOSED ROOTS WITH WET BURLAP AND BACKFILL AS SOON AS POSSIBLE. COAT CUT PLANT SURFACES WITH APPROVED EMULSIFIED ASPHALT PLANT COATING.

C. REPAIR OR REPLACE VEGETATION DESIGNATED FOR REUSE, WHICH HAS BEEN DAMAGED. REMOVE HEAVY GROWTHS OF GRASS BEFORE STRIPPING. STOCKPILE SATISFACTORY TOPSOIL CONTAINING NO LARGE STONES, FOREIGN MATTER AND WEEDS ON SITE FOR REUSE.

D. COMPLETELY REMOVE ALL IMPROVEMENTS, STUMPS AND DEBRIS EXCEPT FOR THOSE INDICATED TO REMAIN. REMOVE BELOW GRADE IMPROVEMENTS AT LEAST 12" BELOW FINISH GRADE SO AS NOT TO INTERFERE WITH NEW CONSTRUCTION. REMOVE ABANDONED MECHANICAL AND ELECTRICAL WORK AS REQUIRED.

E. PREVENT EROSION AND SILTATION OF STREETS, CATCH BASINS AND PIPING. CONTROL WINDBLOWN DUST. REMOVE WASTE MATERIALS AND UNSUITABLE SOIL FROM SITE AND DISPOSE OF IN A LEGAL MANNER.

F. EXCEPT WHERE EXCAVATION TO GREATER DEPTH IS INDICATED, FILL DEPRESSIONS RESULTING FROM CLEARING, GRUBBING AND DEMOLITION WORK COMPLETELY WITH SUITABLE FILL AND COMPACT AS REQUIRED.

3.3 EROSION CONTROL

A. PROVIDE EROSION AND SILTATION CONTROL AS REQUIRED TO MEET ALL LOCAL AND STATE REQUIREMENTS. END OF SECTION

PLANS PREPARED FOR:

verizon wireless
10801 BUSH LAKE ROAD
BLOOMINGTON, MN 55438
PHONE: (952) 946-4700

PLANS PREPARED BY:

7803 Glenroy Road, Suite 102
Bloomington, Minnesota 55439
Phone: 952-831-0131
Fax: 913-438-7777
SSC

STRUCTURAL/CIVIL ENGINEER:

I hereby certify that this plan, specification, or report was prepared by me or under my direct supervision and that I am a duly Licensed Professional Engineer under the laws of the state of Minnesota.

MICHAEL L. OWENS
Typed or Printed name

12/15/14
Date

44052
Reg. NO.

Pages or sheets covered by this certification:
Per Responsible Discipline: STRUCTURAL/CIVIL SC

ELECTRICAL ENGINEER:

I hereby certify that this plan, specification, or report was prepared by me or under my direct supervision and that I am a duly Licensed Professional Engineer under the laws of the state of Minnesota.

Signature

SHELTON D. KEYLING
Typed or Printed name

Date

47757
Reg. NO.

Pages or sheets covered by this certification:
Per Responsible Discipline: ELECTRICAL E

DRAWING NOTICE:

THIS DRAWING HAS NOT BEEN PUBLISHED AND IS THE SOLE PROPERTY OF SSC, INC. AND IS LENT TO THE BORROWER FOR THEIR CONFIDENTIAL USE ONLY, AND IN CONSIDERATION OF THE LOAN OF THIS DRAWING, THE BORROWER PROMISES AND AGREES TO RETURN IT UPON REQUEST AND AGREES THAT IT WILL NOT BE REPRODUCED, COPIED, LENT OR OTHERWISE DISPOSED OF DIRECTLY OR INDIRECTLY, NOR USED FOR ANY PURPOSE OTHER THAN FOR WHICH IT IS FURNISHED.

SUBMITTALS

DESCRIPTION	DATE	BY	REV
ISSUED FOR REVIEW	09/27/13	DDS	A
ISSUED FOR REVIEW	12/09/13	JMB	B
ISSUED FOR REVIEW	12/17/13	PJW	C
ISSUED FOR CONSTRUCTION	09/12/14	PJW	0
REVISED SURVEY, FIBER EQUIPMENT	12/15/14	JMB	1

SITE NAME:

MN07 LEON WILLMAR

SITE NUMBER:

265819

SITE ADDRESS:

515 2ND STREET SW
WILLMAR, MINNESOTA
56201

SHEET DESCRIPTION:

SPECIFICATIONS (3 OF 7)

SSC #:

SHEET NUMBER:

SP-3

EARTH MOVING / EXCAVATION / BACKFILLING SECTION 31 20 00

PART 1 GENERAL

1.1 SUMMARY

PROVIDE EARTHWORK OPERATIONS INCLUDING BUT NOT LIMITED TO EXCAVATION, GRADING, TRENCHING AND COMPACTION.

1.2 QUALITY ASSURANCE COMPACTION:

UNDER STRUCTURES, BUILDING SLABS, STEPS, PAVEMENTS, AND WALKWAYS, 95 PERCENT MAXIMUM DENSITY, ASTM D 1557.

A. GRADING TOLERANCES:

1. LAWNS, UNPAVED AREAS, AND WALKS, PLUS OR MINUS 1 INCH.

2. KEEP SITE FREE FROM ANY PONDING WATER

3. GRADING TOLERANCE FOR FILL UNDER BUILDING OR EQUIPMENT SLABS: PLUS OR MINUS 1/4 INCH MEASURED WITH 10-FOOT STRAIGHTEDGE.

B. TESTING: FIELD TESTING OF EARTHWORK AND COMPACTION SHALL BE PERFORMED BY OWNER'S INDEPENDENT TESTING LAB. THIS WORK IS TO BE COORDINATED BY THE CONTRACTOR.

C. ALL WORK SHALL BE INSPECTED AND RELEASED BY THE OWNER OR HIS AGENT WHO SHALL CARRY OUT THE GENERAL INSPECTION OF THE WORK AS SPECIFIED AND/OR CALLED OUT BY THE CONSTRUCTION DOCUMENTS. PROVIDE A MINIMUM OF 48 HOURS NOTICE PRIOR TO ANY PLACEMENT OF CONCRETE OR BACKFILLING OF TRENCHES. IT IS THE CONTRACTOR'S RESPONSIBILITY TO REQUEST TIMELY INSPECTIONS PRIOR TO PROCEEDING WITH FURTHER WORK THAT WOULD MAKE PARTS OF WORK INACCESSIBLE OR DIFFICULT TO INSPECT.

D. EXISTING UTILITIES: DO NOT INTERRUPT EXISTING UTILITIES SERVING FACILITIES OCCUPIED BY THE OWNER OR OTHERS, EXCEPT WHEN PERMITTED IN WRITING BY OWNER OR HIS AGENT AND THEN ONLY AFTER ACCEPTABLE TEMPORARY UTILITY SERVICES HAVE BEEN PROVIDED.

PART 2 PRODUCTS

2.1 GENERAL

A. UTILITY TRENCH: PROVIDE WELL GRADED SAND (SW-SM) FROM BASE OF TRENCH TO MINIMUM ABOVE THE HIGHEST CONDUIT WITHIN TRENCH. REMAINDER OF TRENCH AREA CAN BE EITHER AB 3 OR CLEAN GRAVEL AS DESCRIBED HEREIN. COMPACT AS REQUIRED TO PREVENT SETTLING.

B. ACCESS ROADS: 6" MINIMUM (UNLESS NOTED OTHERWISE ON DRAWINGS) COMPACTED AB 3 OR APPROVED EQUAL (UNWASHED CRUSHED LIMESTONE GRAVEL CONSISTING OF MULTIPLE AGGREGATE SIZES, ROCK CHIPS, AND ROCK DUST.)

C. COMPOUND (NEW CONSTRUCTION): 2" THICK CLEAN GRAVEL, WITH 100% PASSING THROUGH A 1" SIEVE OVER 4 INCH COMPACTED AB 3.

D. COMPOUND (EXISTING): PROVIDE CLEAN GRAVEL WITH 100% PASSING THROUGH A 1" SIEVE AS REQUIRED TO BRING COMPOUND TO PROPER GRADE OR REPAIR EXISTING DAMAGED AREAS.

E. STRUCTURAL FILL: PROVIDE 4" MINIMUM AB 3 BELOW STRUCTURES OR SLABS

2.2 MATERIALS

A. GEOTEXTILE FABRIC: PROVIDE MIRAFI 500X OR APPROVED EQUAL.

B. PLASTIC MARKING TAPE: SHALL BE ACID AND ALKALI RESISTANT POLYETHYLENE FILM SPECIFICALLY WIDE WITH A MINIMUM THICKNESS OF " MANUFACTURED FOR MARKING AND LOCATING UNDERGROUND UTILITIES.

C. PLASTIC MARKING TAPE: SHALL BE ACID AND ALKALI RESISTANT POLYETHYLENE FILM SPECIFICALLY MANUFACTURED FOR MARKING AND LOCATING UNDERGROUND UTILITIES. 6" WIDE WITH A MINIMUM THICKNESS OF 0.004 INCH. TAPE SHALL HAVE MINIMUM STRENGTH OF 1500 PSI IN BOTH DIRECTIONS AND MANUFACTURED WITH INTEGRAL WIRES OR OTHER MEANS TO ENABLE DETECTION BY A METAL DETECTOR WHEN BURIED UP TO 3 FEET DEEP. THE CORE OF THE TAPE SHALL BE ENCASED IN A PROTECTIVE JACKET OR OTHER MEANS TO PROTECT FROM CORROSION. TAPE COLOR SHALL BE RED FOR ELECTRIC UTILITIES AND ORANGE FOR TELECOMMUNICATION

PART 3 EXECUTION

3.1 INSTALLATION

A. PRIOR TO EXCAVATING, THOROUGHLY EXAMINE AREA TO BE EXCAVATED AND/OR TRENCHED TO VERIFY THE LOCATIONS OF FEATURES ON THE DRAWINGS AND TO ASCERTAIN THE EXISTENCE OF ANY STRUCTURE NOT SHOWN THAT MIGHT INTERFERE WITH NEW CONSTRUCTION. NOTIFY THE OWNER OR HIS AGENT OF ANY OBSTRUCTIONS THAT WILL PREVENT ACCOMPLISHMENT OF THE WORK AS INDICATED ON THE DRAWINGS.

B. EXCAVATION IS UNCLASSIFIED AND INCLUDES EXCAVATION TO SUBGRADE REGARDLESS OF MATERIALS. REPAIR EXCAVATIONS BEYOND ELEVATIONS AND DIMENSIONS INDICATED AS REQUIRED.

C. MAINTAIN STABILITY OF EXCAVATIONS: COORDINATE SHORING AND BRACING AS REQUIRED BY AUTHORITIES HAVING JURISDICTION. PREVENT SURFACE AND SUBSURFACE WATER FROM ACCUMULATING IN EXCAVATIONS. STOCKPILE SATISFACTORY MATERIALS FOR REUSE, ALLOW FOR PROPER DRAINAGE.

D. COMPACT MATERIALS AT THE OPTIMUM MOISTURE CONTENT AS DETERMINED BY ASTM D 1557 BY AERATION OR WETTING TO 95%%% OF MAXIMUM DRY DENSITY TO SUITABLE DEPTH.

E. PLACE ACCEPTABLE MATERIALS IN LAYERS NOT MORE THAN 8" LOOSE DEPTH FOR MATERIALS COMPACTED BY HEAVY EQUIPMENT AND NOT MORE THAN 4" LOOSE DEPTH FOR MATERIALS COMPACTED BY HAND EQUIPMENT TO SUBGRADES INDICATED AS FOLLOWS:

1. STRUCTURAL FILL: USE UNDER FOUNDATIONS, SLABS ON GRADE IN LAYERS AS INDICATED.

2. DRAINAGE FILL: USE UNDER DESIGNATED BUILDING SLABS, AT FOUNDATION DRAINAGE AND ELSEWHERE AS INDICATED.

3. COMMON FILL: USE UNDER UNPAVED AREAS.

4. SUBBASE MATERIAL: USE UNDER GENERAL COMPOUND AREA. IF THICKNESS OF LIFT IS GREATER THAN 6 SPREAD AND COMPACT THE CRUSHED STONE IN MULTIPLE LIFTS OF EQUAL THICKNESS WITH A MAXIMUM LIFT OF " 6

F. GRADE TO 1/2" ABOVE OR BELOW REQUIRED SUBGRADE AND TO A TOLERANCE OF 1/4" IN 10'.

G. PROTECT NEWLY GRADED AREAS FROM TRAFFIC AND EROSION. RE-COMPACT AND RE-GRADE SETTLED, DISTURBED AND DAMAGED AREAS TO RESTORE QUALITY, APPEARANCE, AND CONDITION.

H. CONTROL EROSION TO PREVENT RUNOFF INTO SEWERS OR DAMAGE TO AREAS.

I. CONTROL DUST TO PREVENT HAZARDS TO ADJACENT PROPERTIES AND VEHICLES. IMMEDIATELY REPAIR OR REMEDY DAMAGE CAUSED BY DUST INCLUDING AIR FILTERS IN EQUIPMENT AND VEHICLES. CLEAN SOILED SURFACES.

J. DISPOSE OF WASTE AND UNSUITABLE MATERIALS OFF-SITE IN A LEGAL MANNER.

3.2 BACKFILL

A. AS SOON AS PRACTICAL AFTER COMPLETING CONSTRUCTION OF THE RELATED STRUCTURE, INCLUDING THE SPECIFIED MINIMUM CURING PERIOD FOR CAST-IN-PLACE CONCRETE, BACKFILL THE EXCAVATION WITH APPROVED MATERIAL TO RESTORE THE REQUIRED FINISHED GRADE.

1. PRIOR TO PLACING BACKFILL AROUND STRUCTURES, ALL FORMS SHALL HAVE BEEN REMOVED AND THE EXCAVATION CLEANED OF ALL TRASH, DEBRIS, AND UNSUITABLE MATERIALS.

2. BACKFILL BY PLACING AND COMPACTING SUITABLE BACKFILL MATERIAL OR SELECT GRANULAR BACKFILL MATERIAL. WHEN REQUIRED IN UNIFORM HORIZONTAL LAYERS OF NO GREATER THAN 8 INCHES LOOSE THICKNESS. WHERE HAND OPERATED COMPACTORS ARE USED, THE FILL MATERIAL SHALL BE PLACED IN LIFTS NOT TO EXCEED 4 INCHES IN LOOSE DEPTH.

3. IF THE DENSITY TESTING INDICATES THAT THE SPECIFIED DENSITY, THE SUCCEEDING LAYER SHALL NOT BE PLACED UNTIL THE SPECIFICATION REQUIREMENTS ARE MET UNLESS AUTHORIZED BY THE GEO-TECHNICAL ENGINEER. THE CONTRACTOR SHALL TAKE WHATEVER APPROPRIATE ACTION IS NECESSARY TO OBTAIN PROPER COMPACTION.

B. COMPACT EACH LAYER OF BACKFILL TO A MINIMUM OF 95% OF THE MAXIMUM DRY DENSITY AS PROVIDED BY THE STANDARD PROCTOR TEST, ASTM D 698.

3.3 TRENCH EXCAVATION:

A. UTILITY TRENCHES SHALL BE EXCAVATED TO THE LINES AND GRADES SHOWN ON THE DRAWINGS OR AS DIRECTED BY THE OWNER OR HIS AGENT. PROVIDE SHORING, SHEETING AND BRACING AS REQUIRED TO PREVENT CAVING OR SLOUCHING OF THE TRENCH WALLS.

B. EXTEND THE TRENCH WIDTH A MINIMUM OF 6 INCHES BEYOND THE OUTSIDE EDGE OF THE OUTER- MOST CONDUIT.

C. WHEN SOFT, YIELDING, OR OTHERWISE UNSTABLE SOIL CONDITIONS ARE ENCOUNTERED, BACKFILL AT THE REQUIRED TRENCH TO A DEPTH OF NO LESS THAN 12 INCHES BELOW THE REQUIRED ELEVATION AND BACKFILL WITH GRANULAR BEDDING MATERIAL.

3.4 TRENCH BACKFILL

A. PROVIDE GRANULAR BEDDING MATERIAL (WELL GRADED SAND) IN ACCORDANCE WITH THE DRAWINGS AND THE UTILITY REQUIREMENTS.

B. NOTIFY THE OWNER OR HIS AGENT 24 HOURS IN ADVANCE OF BACKFILLING.

C. CONDUCT UTILITY CHECK TESTS BEFORE BACKFILLING. BACKFILL AND COMPACT TRENCH BEFORE ACCEPTANCE TESTING.

D. PLACE GRANULAR TRENCH BACKFILL UNIFORMLY ON BOTH SIDES OF THE CONDUITS IN 6-INCH UNCOMPACTED LIFTS UNTIL 6 INCHES OVER THE CONDUITS. SOLIDLY RAM AND TAMP BACKFILL INTO SPACES AROUND CONDUITS.

E. PROTECT CONDUIT FROM LATERAL MOVEMENT, IMPACT DAMAGE, OR UNBALANCED LOADING.

F. ABOVE THE CONDUIT EMBEDMENT ZONE, PLACE AND COMPACT BACKFILL MATERIAL IN 8 INCH MAXIMUM LOOSE THICKNESS LIFTS TO RESTORE THE REQUIRED FINISHED SURFACE GRADE.

G. COMPACT FINAL TRENCH BACKFILL TO A DENSITY EQUAL TO OR GREATER THAN EXISTING UNDISTURBED MATERIAL ADJACENT TO THE TRENCH BUT NO LESS THAN A MINIMUM OF 95% OF THE MAXIMUM DRY DENSITY AS PROVIDED BY THE STANDARD PROCTOR TEST, ASTM D 698.

3.5 AGGREGATE ACCESS ROAD (IF APPLICABLE)

A. CLEAR, GRUB, STRIP AND EXCAVATE FOR ACCESS ROAD TO THE LINES AND GRADES INDICATED ON DRAWINGS. SCARIFY TO A DEPTH OF 6 INCHES AND PROOF-ROLL ALL HOLES, RUTS, SOFT PLACES AND OTHER DEFECTS.

B. THE ENTIRE SUBGRADE SHALL BE COMPACTED TO NOT LESS THAN 95% OF THE MAXIMUM DRY DENSITY AS PROVIDED BY THE STANDARD PROCTOR TEST, ASTM D 1557.

C. AFTER PREPARATION OF THE SUBGRADE IS COMPLETE, THE GEOTEXTILE FABRIC (MIRAFI 500X) SHALL BE INSTALLED TO THE LIMITS INDICATED ON DRAWINGS BY ROLLING THE FABRIC OUT LONGITUDINALLY ALONG ROADWAY. THE FABRIC SHALL NOT BE DRAGGED ACROSS THE SUBGRADE. PLACE THE ENTIRE ROLL IN A SINGLE OPERATION, SMOOTHLY AS POSSIBLE.

1. OVERLAPS PARALLEL TO THE ROADWAY WILL BE PERMITTED AT THE CENTERLINE AND AT LOCATIONS BEYOND THE ROADWAY SURFACE WIDTH. NO LONGITUDINAL OVERLAPS SHALL BE LOCATED BETWEEN THE CENTERLINE AND THE SHOULDER. PARALLEL OVERLAPS SHALL BE A MINIMUM OF 3 FEET WIDE.

2. TRANSVERSE OR PERPENDICULAR OVERLAPS AT THE END OF A ROLL SHALL OVERLAP IN THE DIRECTION OF THE AGGREGATE PLACEMENT (PREVIOUS ROLL ON TOP) AND SHALL HAVE A MINIMUM LENGTH OF 3 FEET.

3. ALL OVERLAPS SHALL BE PINNED WITH STAPLES OR NAILS BETWEEN 10 AND 12 INCHES LONG TO INSURE POSITIONING DURING PLACEMENT OF AGGREGATE. PIN LONGITUDINAL SEAMS AT 25 FOOT O. C. AND TRANSVERSE SEAMS EVERY 5 FEET OC.

D. THE AGGREGATE BASE AND SURFACE COURSES SHALL BE CONSTRUCTED IN LAYERS NOT MORE THAN 6 INCHES (COMPACTED) THICKNESS. AGGREGATE TO BE PLACED ON GEOTEXTILE FABRIC AND SHALL BE END-DUMPED ON THE FABRIC FROM THE FREE END OF THE FABRIC OR OVER PREVIOUSLY PLACED AGGREGATE. AT NO TIME SHALL EQUIPMENT BE PERMITTED ON THE ROADWAY WITH LESS THAN 6 INCHES OF MATERIAL COVERING THE FABRIC.

E. THE AGGREGATE SHALL BE IMMEDIATELY COMPACTED TO NOT LESS THAN 95% OF THE MAXIMUM DRY DENSITY AS PROVIDED BY THE PROCTOR TEST, ASTM D 1557 WITH A TAMPING ROLLER, A PNEUMATIC-TIRED ROLLER, OR WITH A VIBRATORY MACHINE OR ANY COMBINATION OF THE ABOVE. THE TOP LAYER SHALL BE GIVEN A FINAL ROLLING WITH A THREE-WHEEL OR TANDEM ROLLER.

3.6 FINISH GRADING

A. PERFORM ALL GRADING TO PROVIDE SMOOTH, EVEN SURFACE DRAINAGE OF THE ENTIRE AREA WITHIN THE LIMITS OF CONSTRUCTION. GRADING SHALL BE COMPATIBLE WITH ALL SURROUNDING TOPOGRAPHY AND STRUCTURES.

B. UTILIZE SATISFACTORY FILL MATERIALS RESULTING FROM THE EXCAVATION WORK IN THE CONSTRUCTION OF FILLS, EMBANKMENTS AND FOR THE REPLACEMENT OF REMOVED UNSUITABLE MATERIALS.

C. ACHIEVE FINISHED GRADE BY PLACING A MINIMUM OF 6 INCHES OF AB 3 ON TOP OF SOIL STABILIZER FABRIC.

D. REPAIR ALL ACCESS ROADS AND SURROUNDING AREAS USED DURING THE COURSE OF THIS WORK TO THEIR ORIGINAL CONDITION.

END OF SECTION

PLANS PREPARED FOR:

verizon wireless
10801 BUSH LAKE ROAD
BLOOMINGTON, MN 55438
PHONE: (952) 946-4700

PLANS PREPARED BY:

7803 Glenroy Road, Suite 102
Bloomington, Minnesota 55439
Phone: 952-831-0131
Fax: 913-438-7777
SSC

STRUCTURAL/CIVIL ENGINEER:

I hereby certify that this plan, specification, or report was prepared by me or under my direct supervision and that I am a duly Licensed Professional Engineer under the laws of the state of Minnesota.

Signature: MICHAEL L. OMENE
Typed or Printed name
Date: 12/15/14
Reg. NO.: 44052
Pages or sheets covered by this certification:
Per Responsible Discipline: STRUCTURAL/CIVIL SC

ELECTRICAL ENGINEER:

I hereby certify that this plan, specification, or report was prepared by me or under my direct supervision and that I am a duly Licensed Professional Engineer under the laws of the state of Minnesota.

Signature: SHELTON D. NEIGLING
Typed or Printed name
Date: 47757
Reg. NO.:
Pages or sheets covered by this certification:
Per Responsible Discipline: ELECTRICAL E

DRAWING NOTICE:

THIS DRAWING HAS NOT BEEN PUBLISHED AND IS THE SOLE PROPERTY OF SSC, INC. AND IS LENT TO THE BORROWER FOR THEIR CONFIDENTIAL USE ONLY, AND IN CONSIDERATION OF THE LOAN OF THIS DRAWING, THE BORROWER PROMISES AND AGREES TO RETURN IT UPON REQUEST AND AGREES THAT IT WILL NOT BE REPRODUCED, COPIED, LENT OR OTHERWISE DISPOSED OF DIRECTLY OR INDIRECTLY, NOR USED FOR ANY PURPOSE OTHER THAN FOR WHICH IT IS FURNISHED.

SUBMITTALS

DESCRIPTION	DATE	BY	REV
ISSUED FOR REVIEW	09/27/13	DDS	A
ISSUED FOR REVIEW	12/09/13	AMB	B
ISSUED FOR REVIEW	12/17/13	PJW	C
ISSUED FOR CONSTRUCTION	09/12/14	PJW	0
REVISED SURVEY, FIBER EQUIPMENT	12/15/14	AMB	1

SITE NAME:
MN07 LEON WILLMAR

SITE NUMBER:
265819

SITE ADDRESS:
515 2ND STREET SW
WILLMAR, MINNESOTA
56201

SHEET DESCRIPTION:
SPECIFICATIONS (4 OF 7)

SSC #:

SHEET NUMBER:
SP-4

FENCES AND GATES SECTION 32 31 00

PART 1 GENERAL

1.1 SUMMARY

A. PROVIDE FENCING AND GATES INCLUDING ALL ASSOCIATED POSTS, RAILS, BRACES, TERMINAL POSTS, AND RELATED MATERIALS AS SHOWN ON DRAWINGS.

1. TYPE A: GALVANIZED CHAIN LINK FENCING AND GATES

2. TYPE B: GALVANIZED CHAIN LINK FENCING AND GATES WITH BARBED WIRE

3. TYPE C: TREATED WOOD FENCING AND GATES

4. MATCH EXISTING FENCE

B. TERMINOLOGY:

1. CHAIN LINK CLASSIFICATION: GALVANIZED (ZINC COATED).

2. TREATED LUMBER: TREATED LUMBER SHALL BE "ACQ" OR APPROVED EQUAL. CCA WILL NOT BE ACCEPTED.

3. O.D.: OUTSIDE DIMENSION

1.2 QUALITY ASSURANCE

A. COMPLY WITH GOVERNING CODES AND REGULATIONS.

B. PROVIDE PRODUCTS OF ACCEPTABLE MANUFACTURERS, WHICH HAVE BEEN IN SATISFACTORY USE IN SIMILAR SERVICE FOR THREE YEARS. USE EXPERIENCED INSTALLERS.

1.3 SCHEDULING AND SEQUENCING

A. CERTAIN PORTIONS OF THE WORK MAY BE SPECIFIED TO BE COMPLETED AND OPERATIONAL PRIOR TO COMPLETION OF ALL WORK. SEQUENCE AND PROPERLY PROTECT EQUIPMENT TO PREVENT CONTAMINATION OR DAMAGE TO EQUIPMENT IN ADJACENT WORK AREAS.

B. STORAGE AND PROTECTION: STORE MATERIALS A MINIMUM OF 12 INCHES ABOVE GROUND.

2A PRODUCTS: CHAIN LINK FENCES AND GATES

2A.1 PRODUCTS

A. FENCE FABRIC, POSTS, TENSION WIRE, CORNER POSTS, AND APPURTENANCES SHALL CONFORM TO THE ASTM CODES AND STANDARDS FOR THE APPROPRIATE TYPE OF MATERIALS AS LISTED.

B. MATERIALS SHALL BE UNIFORM, CONSISTENT, AND MEET THE FOLLOWING REQUIREMENTS.

1. FENCE FABRIC: 72 INCHES HIGH (U.N.O.), HEAVY GALV. CHAIN LINK FENCE CONFORMING TO ASTM A392, CLASS 2, OF 2 INCH MESH 9 GAGE WIRE (0.148 INCHES IN DIAMETER), WITH THE TOP SELVAGE BARBED AND THE BOTTOM KNUCKLED.

2. LINE POSTS: FOR FABRIC UP TO AND INCLUDING SIX FEET IN HEIGHT, LINE POSTS SHALL BE GALV. SCHEDULE 40 PIPE WITH 1.90 INCH O.D. FOR FABRIC MORE THAN 8 FEET HIGH (IF REQUIRED TO MATCH EXISTING OR UNUSUAL SITE CONDITIONS), LINE POSTS SHALL BE GALV. SCHEDULE 40 PIPE WITH 2.375 INCH O.D COMPLY WITH ASTM F 1083.3.

3. END, CORNER, AND PULL POSTS: 2.375 INCH O.D.GALV. SCHED. 40 PIPE UP TO 6 FEET AND 2.875 INCH O.D. FOR FENCES OVER 6 FEET. COMPLY WITH ASTM F 1083.

4. GATE POSTS: GALV. SCHED. 40 PIPE WITH 2.875 INCH O.D. COMPLY WITH ASTM F 1083.

5. BRACE RODS (LOCATED ON EACH SIDE OF GATES AND EACH SIDE AT CORNERS): 1.66 INCH O.D. GALV. SCHED. 40.

6. TRUSS RODS / CROSS BRACING: 3/8 INCH DIAMETER DIAGONAL BARS WITH TURNBUCKLE.

7. TENSION WIRE: 7 GA. US STEEL WIRE GALV. PER ASTM A116 COATING CLASS III ATTACHED 1 INCH BELOW TOP SELVAGE AND 2" ABOVE BOTTOM SELVAGE OF FABRIC O.C. "BY MEANS OF HOG RINGS AT 24

8. APPURTENANCES SUCH AS BRACE BANDS, TENSION BANDS AND BARS: FABRICATED OF 1/8 INCH BY 7/8 INCH GALVANIZED STEEL WITH GALV. STEEL CARRIAGE BOLTS AND NUTS PER ASTM A123. TENSION BARS SHALL BE 1/4 BY 3/4 INCH GALV. STEEL BAR PER ASTM A153.

9. FABRIC TIES: CLASS I GALV. STEEL WIRE NO LESS THAN 9 GA.

10. POST TOPS: PROVIDED FOR EACH POST. MATERIALS SHALL BE PRESSED STEEL OR MALLEABLE IRON THAT PROVIDES WATERTIGHT CLOSURE CAP FOR TUBULAR POSTS AND SHALL BE GALV. PER ASTM A153.

11. BARBED WIRE: BARBED WIRE SHALL CONSIST OF DOUBLE STRANDED, 12-1 ½ GAGE O.C. THE TOP 1 FOOT "WIRE ASTM A121, CLASS 3 WITH 4 POINT BARBS SPACED 5 OF THE FENCE SHALL CONSIST OF 3 STRANDS OF BARBED WIRE ATTACHED TO A 45 DEGREE ANGLE WITH HEAVY PRESSED ARMS CAPABLE OF WITHSTANDING, WITHOUT FAILURE 250 POUNDS DOWNWARD PULL AT THE OUTERMOST END OF THE ARM.

12. GATES

a. GATE MATERIALS SUCH AS FABRIC, BOLTS, NUTS, AND TENSION BARS, SHALL BE CONSISTENT WITH FENCE MATERIALS. GATES SHALL CONSIST OF BOTH SINGLE AND DOUBLE SWING GATES AS SHOWN ON THE DRAWINGS.

b. GATES SHALL BE MANUALLY OPERATED.

c. GATE FRAMES SHALL BE 1.90 INCH O.D. PIPE TO BE FURNISHED WITH ALL NECESSARY FITTINGS, INCLUDING HEAVY DUTY COMMERCIAL DOUBLE GATE LATCH SIMILAR OR EQUAL TO DAC INDUSTRIES #4000.

PART 2B PRODUCTS: WOOD FENCES AND GATES

2B.1 PRODUCTS

A. FENCE MATERIALS, INCLUDING POSTS, RAILS, CORNER POSTS, AND PICKETS SHALL BE AS FOLLOWS:

1. END CORNER, GATE, AND PULL POSTS 8 FEET HIGH OR LESS SHALL BE 2 1/2 INCH NPS SCHEDULE 40 GALV. STEEL PIPE PER ASTM A120. (OUTSIDE DIAMETER OF 2.875 INCHES)

2. LINE POSTS UP TO 8 FEET HIGH, SHALL BE 2 INCH NPS GALVANIZED COLD-FORMED AND WELDED STEEL PIPE COMPLYING WITH ASTM F 1043 WITH AN OUTSIDE DIAMETER OF 2.375 INCHES OR PER ASTM A120.

3. TOP, MIDDLE, AND BOTTOM RAILS SHALL BE 2" X 4" TREATED LUMBER

4. PICKETS SHALL BE 1" X 6" TREATED LUMBER

B. TREATED LUMBER

1. ALL ABOVE GROUND MATERIALS SHALL BE TREATED WITH A MINIMUM OF .25 POUNDS OF PRESERVATIVE PER CUBIC FOOT OF MATERIAL

2. TREATMENT FOR LUMBER SHALL BE APPROVED BY ALL GOVERNING BODIES.

C. GATES:

MANUALLY OPERATED WOOD GATES SHALL BE CONSTRUCTED WITH STEEL FRAME AND WOOD PICKETS. GATES SHALL BE SINGLE OR DOUBLE SWING AS INDICATED ON DRAWINGS.

D. PIPE GRIP TIES: PROVIDE PIPE GRIP TIES OF RECOMMENDED SIZE FOR USE WITH STEEL POSTS SIMPSON PGT'S. INSTALL PER MANUFACTURER'S RECOMMENDATIONS.

PART 3 EXECUTION

3.1 INSTALLATION

A. PHYSICAL LOCATIONS OF FEATURES SUCH AS FENCE LINES, GATES, TERMINAL POSTS SHALL BE PER THE PLANS.

B. INSTALL MATERIALS PER MANUFACTURER'S INSTRUCTIONS. COMPLY WITH ASTM F 567 FOR CHAIN LINK FENCES AND F 537 FOR WOOD FENCES. INSTALL MATERIALS WITH UNIFORM APPEARANCE. COORDINATE WITH OTHER SECTIONS.

C. PROVIDE A REASONABLY SMOOTH PROFILE AT FENCE LINE. BOTTOM OF FENCE SHALL NOT BE MORE THAN 2 INCHES ABOVE FINISHED GRADE. IF FENCE CROSSES EXTREME GRADE DEPRESSION, CONFORM THE FENCE TO THE GROUND CONTOUR, (U.N.O.). CLOSE SPACE BELOW THE BOTTOM OF THE FENCE WITH ADDITIONAL FENCE MATERIALS WHILE MAINTAINING A UNIFORM TOP.

D. POST SPACING AND INSTALLATION

1. INSTALL LINE POSTS AND BRACE AT INTERVALS NOT TO EXCEED 10 FEET AND 8 FEET FOR WOOD FENCES. POSTS SHALL BE EVENLY SPACED. LOCATE CORNER AND TERMINAL POSTS PER DRAWINGS. INSTALL CORNER POSTS WHERE CHANGES IN GRADE EXCEED 30 DEGREES.

2. SET POSTS VERTICALLY IN CYLINDRICAL CONCRETE FOUNDATION IN PER THE SCHEDULE IN TABLE 1 AND IN ACCORDANCE WITH ASTM F567.

TABLE 1 LINE, CORNER, PULL, AND TERMINAL POST INSTALLATION SCHEDULE

	FOUNDATION DIAMETER	FOUNDATION DEPTH	POST EMBEDMENT
LINE POST	0'-10"	3'-6"	3'-0"
TERMINAL POST	1'-0"	3'-8"	3'-0"
GATE POSTS	1'-6"	4'-0"	3'-6"

3. TOP SURFACE OF THE CONCRETE FOUNDATION SHALL BE SMOOTH 1/2 INCH CROWN, SLOPING AWAY FROM THE POST AND BE A MINIMUM OF 4 INCHES BELOW GRADE. THE POST SHALL BE 6 INCHES FROM THE BOTTOM OF THE CONCRETE POUR.

4. HOLES MAY BE HAND AUGURED OR DRILLED. IF ROCK IS ENCOUNTERED, DRILL MIN. 12 INCHES FOR LINE POSTS AND 18 INCHES FOR CORNER, GATE, OR TERMINAL POSTS. DRILL HOLES 1 INCH LARGER THAN SIZES IN TABLE 1. IF SOLID ROCK IS BELOW SOIL OVERBURDEN, DRILL TO FULL DEPTH REQUIRED, EXCEPT PENETRATION INTO ROCK NEED NOT EXCEED MINIMUM DEPTHS SPECIFIED.

E. SETTING POSTS

1. REMOVE ANY LOOSE AND FOREIGN MATERIALS FROM THE SIDES AND BOTTOMS OF THE HOLES; MOISTEN SOIL PRIOR TO PLACING THE CONCRETE. CENTER AND ALIGN POSTS, TAMP TO CONSOLIDATE, AND SECURE UNTIL CONCRETE IS FULLY CURED.

2. KEEP CONCRETE SURFACES MOIST FOR AT LEAST 7 DAYS AFTER PLACEMENT.

3. POSTS SET IN SLEEVED HOLES SHALL BE GROUTED IN PLACE USING A NON-SHRINK PORTLAND CEMENT GROUT APPROVED BY THE ENGINEER.

1. PRIOR TO PLACING COMPONENTS SUCH AS FABRIC, RAILS, TENSION WIRE, AND GATES, VERIFY THAT THE CONCRETE HAS REACHED AT LEAST 75% OF ITS DESIGN STRENGTH AS PRESCRIBED ON THE PLAN DETAILS, OR HAS CURED A MINIMUM OF 7 DAYS AFTER SETTING THE POSTS.

F. BRACING (CHAIN LINK FENCE ONLY)

1. INSTALL TENSION WIRES PARALLEL TO THE LINE OF FABRIC BY WEAVING NO LESS THAN 7 GA. WIRE OF THE APPROPRIATE TYPE THROUGH FABRIC AND TYING TO EACH POST. INSTALL TENSION WIRE BEFORE STRETCHING FABRIC.

2. INSTALL HORIZONTAL PIPE BRACE AT MID-HEIGHT ON EACH SIDE OF TERMINAL POSTS. FIRMLY ATTACH WITH FITTINGS. INSTALL DIAGONAL TRUSS RODS AT THESE POINTS. ADJUST TRUSS ROD, ENSURING POSTS REMAIN PLUMB.

G. INSTALLING FABRIC (CHAIN LINK FENCE ONLY)

1. INSTALL THE CHAIN LINK FENCE FABRIC SO THAT THE POSTS ARE ENCLOSED. STRETCH THE FABRIC TAUT, APPROXIMATELY 2 INCHES ABOVE THE GROUND, AND SECURELY TO THE POSTS.

2. CUT FABRIC AND ATTACH EACH SPAN INDEPENDENTLY AT ALL TERMINAL AND CORNER POSTS. USE STRETCHER BARS WITH FABRIC BANDS SPACED AT MAX. 5 INCH INTERVALS TO FASTEN FABRIC TO TERMINAL POSTS. USE TIE WIRE, METAL BANDS, OR OTHER APPROVED MATERIAL ATTACHED AT MAXIMUM 15 INCH INTERVALS TO FASTEN FABRIC TO LINE POSTS, TOP RAIL OR BOTTOM TENSION WIRE.

H. INSTALLING GATES

1. INSTALL GATES ACCORDING TO THE LOCATIONS, TYPE, AND SIZE INDICATED ON THE PLANS.

2. GATES SHALL BE BRACED AND TRUSSED TO PREVENT SAGGING, BUCKLING, AND WEAVING, AND COVERED WITH SAME FABRIC AS THE FENCE U.N.O. FIXED END RATCHET BANDS SHALL BE FURNISHED FOR FASTENING. FURNISH GATES WITH ALL FITTINGS AND HARDWARE REQUIRED. HEAVY DUTY COMMERCIAL LATCHES PROVIDED FOR USE WITH PADLOCK AND HINGES SHALL ALLOW 180 DEGREE SWING. PROVIDE 3/8 INCH DIAMETER CROSSBRACING.

3. INSTALL GATES PLUMB, LEVEL, AND SECURE FOR THE FULL OPENING WITHOUT INTERFERENCES

4. INSTALL ALL ITEMS PER MANUFACTURER'S RECOMMENDATIONS. INSPECT ALL PARTS AND ATTACHMENTS FOR DEFECTS, AND INSTALL, LUBRICATE, AND ADJUST EQUIPMENT TO ENSURE SMOOTH OPERATION.

5. INSTALL (WELD TO GATE FRAME) TWO 8 INCH SECTIONS (ONE PER GATE) OF ¼ INCH NOMINAL WELDED, GRADE 30 MINIMUM GALVANIZED STEEL CHAIN JUST BELOW LATCH FOR PADLOCKS. VERIFY INSIDE DIMENSIONS OF CHAIN LINK WILL RECEIVE STANDARD PADLOCKS.

I. MISCELLANEOUS INSTALLATION (CHAIN LINK FENCE)

1. USE U-SHAPED TIE WIRES, CONFORMING TO THE DIAMETERS OF PIPE, THAT CLASP THE PIPE AND FABRIC FIRMLY WITH ENDS TWISTED AT LEAST 2 FULL TURNS.

2. INSTALL NUTS FOR FASTENERS ON TENSION BANDS AND HARDWARE BOLTS ON THE SIDE OF THE FENCE OPPOSITE THE FABRIC. THE ENDS OF BOLTS, ONCE SECURE AND CHECKED FOR SMOOTH OPERATION, SHALL BE PEENED TO PREVENT REMOVAL OF NUTS.

3.2 PROTECTION

A. A GUARANTEE SHALL BE FURNISHED FOR ALL MATERIALS, INSTALLATION, AND WORKMANSHIP TO BE FREE OF DEFECTS FOR A PERIOD OF 1 YEAR FROM THE DATE OF ACCEPTANCE UNLESS NOTED OTHERWISE IN THE CONTRACT DOCUMENTS. ANY DEFECT IN INSTALLATION OR WORKMANSHIP SHALL BE REPAIRED, AND/OR REPLACED WITHOUT COST TO THE OWNER.

B. REPAIR COATINGS DAMAGED IN THE FIELD AS RECOMMENDED BY THE MANUFACTURER.

END OF SECTION

PLANS PREPARED FOR:

verizon wireless
10801 BUSH LAKE ROAD
BLOOMINGTON, MN 55438
PHONE: (952) 946-4700

PLANS PREPARED BY:

7803 Glenroy Road, Suite 102
Bloomington, Minnesota 55439
Phone: 952-831-0131
Fax: 913-438-7777
SSC

STRUCTURAL/CIVIL ENGINEER:

I hereby certify that this plan, specification, or report was prepared by me or under my direct supervision and that I am a duly Licensed Professional Engineer under the laws of the state of Minnesota.

Signature: MICHAEL L. OWENS
Typed or Printed name
Date: 12/15/14
Reg. NO.: 44062
Pages or sheets covered by this certification:
Per Responsible Discipline: STRUCTURAL/CIVIL SC

ELECTRICAL ENGINEER:

I hereby certify that this plan, specification, or report was prepared by me or under my direct supervision and that I am a duly Licensed Professional Engineer under the laws of the state of Minnesota.

Signature: SHELTON D. KIDSLING
Typed or Printed name
Date:
Reg. NO.: 47757
Pages or sheets covered by this certification:
Per Responsible Discipline: ELECTRICAL E

DRAWING NOTICE:

THIS DRAWING HAS NOT BEEN PUBLISHED AND IS THE SOLE PROPERTY OF SSC, INC. AND IS LENT TO THE BORROWER FOR THEIR CONFIDENTIAL USE ONLY, AND IN CONSIDERATION OF THE LOAN OF THIS DRAWING, THE BORROWER PROMISES AND AGREES TO RETURN IT UPON REQUEST AND AGREES THAT IT WILL NOT BE REPRODUCED, COPIED, LENT OR OTHERWISE DISPOSED OF DIRECTLY OR INDIRECTLY, NOR USED FOR ANY PURPOSE OTHER THAN FOR WHICH IT IS FURNISHED.

SUBMITTALS

DESCRIPTION	DATE	BY	REV
ISSUED FOR REVIEW	09/27/13	DCS	A
ISSUED FOR REVIEW	12/09/13	JMB	B
ISSUED FOR REVIEW	12/17/13	PJW	C
ISSUED FOR CONSTRUCTION	09/12/14	PJW	0
REVISED SURVEY, FIBER EQUIPMENT	12/15/14	JMB	1

SITE NAME:

MN07 LEON WILLMAR

SITE NUMBER:

265819

SITE ADDRESS:

515 2ND STREET SW
WILLMAR, MINNESOTA
56201

SHEET DESCRIPTION:

SPECIFICATIONS (5 OF 7)

SSC #:

SHEET NUMBER:

SP-5

SECTION 16000 ELECTRICAL

PART 1 GENERAL

1.1 GENERAL CONDITIONS:

A. THE CONTRACTOR SHALL INSPECT THE SITE WHERE THIS WORK IS TO BE PERFORMED AND FULLY FAMILIARIZE HIMSELF WITH ALL CONDITIONS RELATED TO THIS PROJECT.

B. THE CONTRACTOR SHALL OBTAIN AND PAY FOR ALL PERMITS AND LICENSES AND SHALL MAKE ALL DEPOSITS AND PAY ALL FEES REQUIRED FOR THE PERFORMANCE OF WORK UNDER THIS SECTION.

C. DRAWINGS SHOW THE GENERAL ARRANGEMENT OF ALL SYSTEMS AND COMPONENTS COVERED UNDER THIS SECTION. THE CONTRACTOR SHALL VERIFY ALL DIMENSIONS. DRAWINGS SHALL NOT BE SCALED TO DETERMINE DIMENSIONS.

1.2 LAWS, REGULATIONS, ORDINANCES, STATUTES AND CODES.

A. ALL WORK SHALL BE INSTALLED IN ACCORDANCE WITH THE NATIONAL ELECTRICAL CODE, AND ALL APPLICABLE LOCAL LAWS, REGULATIONS, ORDINANCES, STATUTES AND CODES.

1.3 REFERENCES:

A. THE PUBLICATIONS LISTED BELOW FORM PART OF THIS SPECIFICATION. EACH PUBLICATION SHALL BE THE LATEST REVISION AND ADDENDUM IN EFFECT ON THE DATE THIS SPECIFICATION IS ISSUED FOR CONSTRUCTION UNLESS OTHERWISE NOTED. EXCEPT AS MODIFIED BY THE REQUIREMENTS SPECIFIED HEREIN OR THE DETAILS OF THE DRAWINGS, WORK INCLUDED IN THIS SPECIFICATION SHALL CONFORM TO THE APPLICABLE PROVISIONS OF THESE PUBLICATIONS.

1. ANSI/IEEE (AMERICAN NATIONAL STANDARDS INSTITUTE)

2. IEEE (INSTITUTE OF ELECTRICAL AND ELECTRONICS ENGINEERS)

3. ASTM (AMERICAN SOCIETY FOR TESTING AND MATERIALS)

4. ICEA (INSULATED CABLE ENGINEERS ASSOCIATION)

5. NEMA (NATIONAL ELECTRICAL MANUFACTURER'S ASSOCIATION)

6. NFPA (NATIONAL FIRE PROTECTION ASSOCIATION)

7. OSHA (OCCUPATIONAL SAFETY AND HEALTH ADMINISTRATION)

8. UL (UNDERWRITERS LABORATORIES, INC.)

1.4 SCOPE OF WORK:

A. WORK UNDER THIS SECTION SHALL CONSIST OF FURNISHING ALL LABOR, MATERIAL AND ASSOCIATED SERVICES REQUIRED TO COMPLETELY CONSTRUCT AND LEAVE READY FOR OPERATION SYSTEMS AS SHOWN ON THE DRAWINGS AND HEREIN DESCRIBED.

B. ALL ELECTRICAL EQUIPMENT UNDER THIS CONTRACT SHALL BE PROPERLY TESTED, ADJUSTED, AND ALIGNED BY THE CONTRACTOR.

C. THE CONTRACTOR SHALL BE RESPONSIBLE FOR ALL EXCAVATING, DRAINING, TRENCHES, BACKFILLING, AND REMOVAL OF EXCESS DIRT.

D. THE CONTRACTOR SHALL FURNISH TO THE OWNER, CERTIFICATES OF FINAL INSPECTION AND APPROVAL FROM THE INSPECTION AUTHORITIES HAVING JURISDICTION.

PART 2 PRODUCTS

2.1 GENERAL:

A. ALL ITEMS OF MATERIALS AND EQUIPMENT SHALL BE NEW, FREE FROM DEFECTS AND OF THE BEST QUALITY NORMALLY USED FOR THE PURPOSE IN GOOD COMMERCIAL PRACTICE.

B. ALL MATERIALS AND EQUIPMENT SHALL BE ACCEPTABLE TO THE AUTHORITY HAVING JURISDICTION AS SUITABLE FOR THE USE INTENDED.

C. ALL EQUIPMENT SHALL BEAR THE UNDERWRITERS LABORATORIES LABEL OF APPROVAL, AND SHALL CONFORM TO REQUIREMENTS OF THE NATIONAL ELECTRICAL CODE.

D. ALL OVERCURRENT DEVICES SHALL HAVE AN INTERRUPTING RATING EQUAL TO OR GREATER THAN THE SHORT CIRCUIT CURRENT TO WHICH THEY ARE SUBJECTED, 10,000 AIC MINIMUM. VERIFY AVAILABLE SHORT CIRCUIT CURRENT DOES NOT EXCEED THE RATING OF ELECTRICAL EQUIPMENT.

2.2 MATERIALS AND EQUIPMENT:

A. CONDUIT:

1. RIGID GALVANIZED STEEL CONDUIT (RGS) SHALL BE HOT-DIP GALVANIZED INSIDE AND OUTSIDE INCLUDING ENDS AND THREADS AND ENAMELED OR LACQUERED INSIDE IN ADDITION TO GALVANIZING.

2. FLEXIBLE METAL CONDUIT SHALL BE GALVANIZED, ZINC-COATED STEEL, PVC COATED FOR OUTDOOR APPLICATIONS.

3. CONDUIT CLAMPS, STRAPS AND SUPPORTS SHALL BE STEEL OR MALLEABLE IRON. ALL FITTINGS SHALL BE COMPRESSION TYPE AND WATERTIGHT.

4. NON-METALLIC CONDUIT AND FITTINGS SHALL BE SCHEDULE 40 PVC, HEAVY-WALL RIGID WITH SOLVENT-CEMENT-TYPE JOINTS AS RECOMMENDED BY THE MANUFACTURER.

B. WIRE AND CABLE:

1. WIRE AND CABLE SHALL BE FLAME-RETARDANT, MOISTURE AND HEAT RESISTANT THERMOPLASTIC, SINGLE CONDUCTOR, COPPER, TYPE THHN/THWN, 600 VOLT, SIZES AS INDICATED, #12 AWG MINIMUM.

2. #10 AWG AND SMALLER CONDUCTORS SHALL BE SOLID AND #8 AWG AND LARGER CONDUCTORS SHALL BE STRANDED.

3. SOLDERLESS, PRESSURE-TYPE CONNECTORS CONSTRUCTED OF HIGH- STRENGTH, NON-CORRODIBLE, TIN-PLATED COPPER DESIGNED TO FURNISH HIGH- PULLOUT STRENGTH AND HIGH CONDUCTIVITY JOINTS SHALL BE USED.

4. SUPPORT GRIPS SHALL BE SINGLE WEAVE, CLOSED MESH, HIGH-GRADE, NON-MAGNETIC, TIN-COATED BRONZE CAPABLE OF SUPPORTING TEN TIMES THE CABLE DEAD WEIGHT, HUBBELL KELLEMS OR APPROVED EQUAL.

C. DISCONNECT SWITCHES:

1. DISCONNECT SWITCHES SHALL BE HEAVY DUTY, DEAD-FRONT, QUICK-MAKE, QUICK-BREAK, EXTERNALLY OPERABLE, HANDLE LOCKABLE AND INTERLOCKED WITH COVER IN CLOSED POSITION, RATING AS INDICATED, UL LABELED FURNISHED IN NEMA 3R ENCLOSURE, SQUARE D CLASS 3110 OR APPROVED EQUAL.

D. SYSTEM GROUNDING:

1. GROUNDING CONDUCTOR SHALL BE BARE, STRANDED, COPPER, SIZE AS INDICATED, EXCEPT ABOVE GROUND GROUNDING CONDUCTORS SHALL BE INSULATED.

2. GROUND BUSSES SHALL BE BARE ANNEALED COPPER BARS OF RECTANGULAR CROSS SECTION.

3. CONNECTORS SHALL BE HIGH-CONDUCTIVITY, HEAVY DUTY, LISTED AND LABELED AS GROUNDING CONNECTORS FOR THE MATERIALS USED. USE TWO-HOLE COMPRESSION LUGS WITH HEAT SHRINK FOR MECHANICAL CONNECTIONS.

4. EXOTHERMIC WELDED CONNECTIONS SHALL BE PROVIDED IN KIT FORM AND SELECTED FOR THE SPECIFIC TYPES, SIZES, AND COMBINATIONS OF CONDUCTORS AND OTHER ITEMS TO BE CONNECTED.

5. GROUND RODS SHALL BE COPPER-CLAD STEEL WITH HIGH-STRENGTH STEEL CORE AND ELECTROLYTIC-GRADE COPPER OUTER SHEATH, MOLTEN WELDED TO CORE, 3/4" x 10'-0".

E. OTHER MATERIALS:

1. THE CONTRACTOR SHALL PROVIDE OTHER MATERIALS, THOUGH NOT SPECIFICALLY DESCRIBED, WHICH ARE REQUIRED FOR A COMPLETELY OPERATIONAL SYSTEM AND PROPER INSTALLATION OF THE WORK.

PLANS PREPARED FOR:

verizon wireless
16801 BUSH LAKE ROAD
BLOOMINGTON, MN 55438
PHONE: (952) 946-4700

PLANS PREPARED BY:

SSC
7803 Glenroy Road, Suite 102
Bloomington, Minnesota 55439
Phone: 952-831-0131
Fax: 913-438-7777

STRUCTURAL/CIVIL ENGINEER:

I hereby certify that this plan, specification, or report was prepared by me or under my direct supervision and that I am a duly Licensed Professional Engineer under the laws of the state of Minnesota.

Signature — MICHAEL L. OWENS, Typed or Printed name

Date — 44052, Reg. NO.

Pages or sheets covered by this certification:
Per Responsible Discipline: STRUCTURAL/CIVIL SC

ELECTRICAL ENGINEER:

I hereby certify that this plan, specification, or report was prepared by me or under my direct supervision and that I am a duly Licensed Professional Engineer under the laws of the state of Minnesota.

Signature — SHELTON D. KEISLING, Typed or Printed name

Date 12-15-14 — 47757, Reg. NO.

Pages or sheets covered by this certification:
Per Responsible Discipline: ELECTRICAL E

DRAWING NOTICE:

THIS DRAWING HAS NOT BEEN PUBLISHED AND IS THE SOLE PROPERTY OF SSC, INC. AND IS LENT TO THE BORROWER FOR THEIR CONFIDENTIAL USE ONLY, AND IN CONSIDERATION OF THE LOAN OF THIS DRAWING, THE BORROWER PROMISES AND AGREES TO RETURN IT UPON REQUEST AND AGREES THAT IT WILL NOT BE REPRODUCED, COPIED, LENT OR OTHERWISE DISPOSED OF DIRECTLY OR INDIRECTLY, NOR USED FOR ANY PURPOSE OTHER THAN FOR WHICH IT IS FURNISHED.

SUBMITTALS:

DESCRIPTION	DATE	BY	REV
ISSUED FOR REVIEW	09/27/13	DDS	A
ISSUED FOR REVIEW	12/09/13	JMB	B
ISSUED FOR REVIEW	12/17/13	PJW	C
ISSUED FOR CONSTRUCTION	09/12/14	PJW	0
REVISED SURVEY, FIBER EQUIPMENT	12/15/14	JMB	1

SITE NAME:

MN07 LEON WILLMAR

SITE NUMBER:

265819

SITE ADDRESS:

515 2ND STREET SW
WILLMAR, MINNESOTA
56201

SHEET DESCRIPTION:

SPECIFICATIONS (6 OF 7)

SSC #:

SHEET NUMBER:

SP-6

PART 3 EXECUTION

3.1 GENERAL:

A. ALL MATERIALS AND EQUIPMENT SHALL BE INSTALLED IN STRICT ACCORDANCE WITH THE MANUFACTURER'S RECOMMENDATIONS.

B. EQUIPMENT SHALL BE TIGHTLY COVERED AND PROTECTED AGAINST DIRT OR WATER, AND AGAINST CHEMICAL OR MECHANICAL INJURY DURING INSTALLATION AND CONSTRUCTION PERIODS.

3.2 LABOR AND WORKMANSHIP:

A. ALL LABOR FOR THE INSTALLATION OF MATERIALS AND EQUIPMENT FURNISHED FOR THE ELECTRICAL SYSTEM SHALL BE DONE BY EXPERIENCED MECHANICS OF THE PROPER TRADES.

B. ALL ELECTRICAL EQUIPMENT FURNISHED SHALL BE ADJUSTED, ALIGNED AND TESTED BY THE CONTRACTOR AS REQUIRED TO PRODUCE THE INTENDED PERFORMANCE.

C. UPON COMPLETION OF THE WORK, THE CONTRACTOR SHALL THOROUGHLY CLEAN ALL EXPOSED EQUIPMENT, REMOVE ALL LABELS AND ANY DEBRIS, CRATING OR CARTONS AND LEAVE THE INSTALLATION FINISHED AND READY FOR OPERATION.

3.3 COORDINATION:

A. THE CONTRACTOR SHALL COORDINATE THE INSTALLATION OF ELECTRICAL ITEMS WITH THE OWNER-FURNISHED EQUIPMENT DELIVERY SCHEDULE TO PREVENT UNNECESSARY DELAYS IN THE TOTAL WORK.

3.4 INSTALLATION:

A. CONDUIT:

1. ALL ELECTRICAL WIRING SHALL BE INSTALLED IN CONDUIT AS HEREIN SPECIFIED. NO CONDUIT OR TUBING OF LESS THAN 3/4 INCH NOMINAL SIZE SHALL BE USED.

2. PROVIDE RGS CONDUIT FOR ALL EXPOSED, EXTERIOR CONDUIT.

3. PROVIDE SCHEDULE 40 PVC OR RGS CONDUIT BELOW GRADE, 1" MINIMUM, UNLESS NOTED OTHERWISE. ALL 90 DEGREE BENDS TO ABOVE GRADE SHALL BE RGS. MINIMUM BURIAL DEPTH SHALL BE 24" CLEAR TO TOP OF CONDUIT, UNLESS NOTED OTHERWISE.

4. USE GALVANIZED FLEXIBLE STEEL CONDUIT WHERE DIRECT CONNECTION IS NOT DESIRABLE FOR REASONS OF EQUIPMENT MOVEMENT, VIBRATION, OR FOR EASE OF MAINTENANCE. USE LIQUIDTIGHT, PVC COATED FLEXIBLE METAL CONDUIT FOR OUTDOOR APPLICATIONS.

5. INSTALL GALVANIZED FLEXIBLE STEEL CONDUIT AT ALL POINTS OF CONNECTION TO EQUIPMENT MOUNTED ON SUPPORTS TO ALLOW FOR EXPANSION AND CONTRACTION.

6. A RUN OF CONDUIT BETWEEN BOXES OR FITTINGS SHALL NOT CONTAIN MORE THAN THE EQUIVALENT OF FOUR QUARTER-BENDS INCLUDING THOSE BENDS LOCATED IMMEDIATELY AT THE BOX OR FITTING. THE RADIUS OF BENDS SHALL NEVER BE SHORTER THAN THAT OF THE CORRESPONDING TRADE ELBOW.

7. WHERE CONDUIT HAS TO BE CUT IN THE FIELD, IT SHALL BE CUT SQUARE WITH A PIPE CUTTER USING CUTTING KNIVES.

8. ALL CONDUITS SHALL BE SWABBED CLEAN BY PULLING AN APPROPRIATE SIZE MANDREL THROUGH THE CONDUIT BEFORE INSTALLATION OF WIRE OR CABLE. CLEAR ALL BLOCKAGES AND REMOVE BURRS, DIRT, AND DEBRIS.

9. INSTALL PULL STRINGS IN ALL EMPTY CONDUITS. IDENTIFY PULL STRINGS AT EACH END WITH ITS DESTINATION.

10. PROVIDE INSULATED GROUNDING BUSHINGS FOR ALL CONDUITS STUBBED INTO EQUIPMENT ENCLOSURES OR STUBBED OUT FOR FUTURE USE BY OTHERS.

11. CONTRACTOR IS RESPONSIBLE FOR PROTECTING ALL CONDUITS DURING CONSTRUCTION. TEMPORARY OPENINGS IN THE CONDUIT SYSTEM SHALL BE PLUGGED OR CAPPED TO PREVENT ENTRANCE OF MOISTURE OR FOREIGN MATTER. CONTRACTOR SHALL REPLACE ANY CONDUITS CONTAINING FOREIGN MATERIALS THAT CANNOT BE REMOVED.

12. INSTALL 2" ORANGE DETECTABLE TAPE 12" ABOVE ALL UNDERGROUND CONDUIT AND WIRE.

13. CONDUITS SHALL BE INSTALLED IN SUCH A MANNER AS TO INSURE AGAINST COLLECTION OF TRAPPED CONDENSATION.

B. WIRE AND CABLE:

1. ALL POWER WIRING SHALL BE COLOR CODED AS FOLLOWS:

DESCRIPTION	120/240V	208Y/120V	480Y/277V
PHASE A	BLACK	BLACK	BROWN
PHASE B	RED	RED	ORANGE
PHASE C		BLUE	YELLOW
NEUTRAL	WHITE	WHITE	GRAY
GROUND	GREEN	GREEN	GREEN

2. SPLICES SHALL BE MADE ONLY AT OUTLETS, JUNCTION BOXES, OR ACCESSIBLE RACEWAYS WITH PRESSURE-TYPE CONNECTORS.

3. PULLING LUBRICANTS SHALL BE SOAPSTONE POWDER, POWDERED TALC, OR A COMMERCIAL PULLING COMPOUND. NO SOAP SUDS, SOAP FLAKES, OIL, OR GREASE SHALL BE USED, AS THESE MAY BE HARMFUL TO CABLE INSULATION. CONTRACTOR SHALL USE NYLON OR HEMP ROPE FOR PULLING CABLE TO AVOID SCORING THE CONDUIT.

4. CABLES SHALL BE NEATLY TRAINED, WITHOUT INTERLACING, AND BE OF SUFFICIENT LENGTH IN ALL BOXES, EQUIPMENT, ETC. TO PERMIT MAKING A NEAT ARRANGEMENT. CABLES SHALL BE SECURED IN A MANNER TO AVOID TENSION ON CONDUCTORS OR TERMINALS, AND SHALL BE PROTECTED FROM MECHANICAL INJURY AND FROM MOISTURE. SHARP BENDS OVER CONDUIT BUSHINGS ARE PROHIBITED. DAMAGED CABLES SHALL BE REMOVED AND REPLACED AT THE CONTRACTOR'S EXPENSE.

C. DISCONNECT SWITCHES:

1. INSTALL DISCONNECT SWITCHES LEVEL AND PLUMB. CONNECT TO WIRING SYSTEM AND GROUND AS INDICATED.

D. GROUNDING:

1. ALL METALLIC PARTS OF ELECTRICAL EQUIPMENT WHICH DO NOT CARRY CURRENT SHALL BE GROUNDED IN ACCORDANCE WITH THE REQUIREMENTS OF ARTICLE 250 OF THE NATIONAL ELECTRICAL CODE.

2. PROVIDE ELECTRICAL GROUNDING AND BONDING SYSTEMS INDICATED WITH ASSEMBLY OF MATERIALS, INCLUDING GROUNDING ELECTRODES, BONDING JUMPERS AND ADDITIONAL ACCESSORIES AS REQUIRED FOR A COMPLETE INSTALLATION.

3. ROUTE GROUNDING CONNECTIONS AND CONDUCTORS TO GROUND IN THE SHORTEST AND STRAIGHTEST PATHS POSSIBLE TO MINIMIZE TRANSIENT VOLTAGE RISES.

4. TIGHTEN GROUNDING AND BONDING CONNECTORS, INCLUDING SCREWS AND BOLTS, IN ACCORDANCE WITH MANUFACTURER'S PUBLISHED TORQUE TIGHTENING VALUES FOR CONNECTORS AND BOLTS. WHERE MANUFACTURER'S TORQUING REQUIREMENTS ARE NOT AVAILABLE, TIGHTEN CONNECTIONS TO COMPLY WITH TIGHTENING TORQUE VALUES SPECIFIED IN UL 486A TO ASSURE PERMANENT AND EFFECTIVE GROUNDING.

5. ALL UNDERGROUND GROUNDING CONNECTIONS SHALL BE MADE BY THE EXOTHERMIC WELD PROCESS AND INSTALLED IN ACCORDANCE WITH THE MANUFACTURER'S INSTRUCTIONS.

6. ALL GROUND CONNECTIONS SHALL BE INSPECTED FOR TIGHTNESS. EXOTHERMIC-WELDED CONNECTIONS SHALL BE APPROVED BY THE CONSTRUCTION INSPECTOR BEFORE BEING PERMANENTLY CONCEALED.

7. APPLY CORROSION-RESISTANT FINISH TO FIELD CONNECTIONS, AND PLACES WHERE FACTORY APPLIED PROTECTIVE COATINGS HAVE BEEN DESTROYED. USE COPPER-BASED "NO-OX" OR APPROVED EQUAL.

8. A SEPARATE, CONTINUOUS, INSULATED EQUIPMENT GROUNDING CONDUCTOR SHALL BE INSTALLED IN ALL FEEDER AND BRANCH CIRCUITS

9. BOND ALL INSULATED GROUNDING BUSHINGS WITH A BARE #6 AWG GROUNDING CONDUCTOR TO A GROUND BUS OR GROUNDING LUG IN ENCLOSURE.

10. DIRECT BURIED GROUND CONDUCTORS SHALL BE INSTALLED AT A NOMINAL DEPTH OF 30" BELOW GRADE, UNLESS NOTED OTHERWISE.

11. ALL GROUNDING CONDUCTORS EMBEDDED IN OR PENETRATING CONCRETE SHALL BE INSULATED OR INSTALLED IN PVC CONDUIT.

12. INSTALL ELECTROLYTIC GROUNDING SYSTEM IN STRICT ACCORDANCE WITH MANUFACTURER'S INSTRUCTIONS. REMOVE SEALING TAPE FROM LEACHING AND BREATHER HOLES. INSTALL PROTECTIVE BOX FLUSH WITH GRADE.

13. DRIVE GROUND RODS UNTIL TOPS ARE 30 INCHES BELOW FINAL GRADE.

14. GROUNDING CONDUCTOR TO EQUIPMENT GROUND LUGS:

1) BOLTED TO EQUIPMENT HOUSING WITH STAINLESS STEEL BOLTS AND LOCK WASHERS.
2) ALL EQUIPMENT TO BE GROUNDED SHALL BE FREE OF PAINT OR ANY OTHER MATERIAL COVERING BARE METAL AT THE POINT OF CONNECTION.

3.5 ACCEPTANCE TESTING:

1. PROVIDE PERSONNEL AND EQUIPMENT, MAKE REQUIRED TESTS, AND SUBMIT TEST REPORTS UPON COMPLETION OF TESTS.

2. WHEN MATERIAL AND/OR WORKMANSHIP IS FOUND NOT TO COMPLY WITH THE SPECIFIED REQUIREMENTS, THE NONCOMPLYING ITEMS SHALL BE REMOVED FROM THE JOBSITE AND REPLACED WITH ITEMS COMPLYING WITH THE SPECIFIED REQUIREMENTS PROMPTLY AFTER RECEIPT OF NOTICE OF SUCH NON-COMPLIANCE.

A. TEST PROCEDURES:

1. ALL FEEDERS SHALL HAVE THEIR INSULATION TESTED AFTER INSTALLATION, BUT BEFORE CONNECTION TO DEVICES. THE CONDUCTORS SHALL TEST FREE FROM SHORT CIRCUITS AND GROUNDS. -TESTING SHALL BE FOR ONE MINUTE USING 1000V DC. INVESTIGATE ANY VALUES LESS THAN 50 MEGOHMS.

2. PRIOR TO ENERGIZING CIRCUITRY, TEST WIRING DEVICES FOR ELECTRICAL CONTINUITY AND PROPER POLARITY CONNECTIONS.

3. MEASURE AND RECORD VOLTAGES BETWEEN PHASES AND BETWEEN PHASE WIRES AND NEUTRALS. SUBMIT A REPORT OF MAXIMUM AND MINIMUM VOLTAGES.

4. PERFORM GROUND TEST TO MEASURE GROUND RESISTANCE OF GROUNDING SYSTEM USING THE IEEE STANDARD 3-POINT "FALL-OF-POTENTIAL" METHOD. PROVIDE PLOTTED TEST VALUES & LOCATION SKETCH. NOTIFY THE ENGINEER IMMEDIATELY IF MEASURED VALUE IS OVER 5 OHMS.

END OF SECTION

END OF SPECIFICATION

PLANS PREPARED FOR:

verizon wireless
10801 BUSH LAKE ROAD
BLOOMINGTON, MN 55438
PHONE: (952) 946-4700

PLANS PREPARED BY:

7803 Glenroy Road, Suite 102
Bloomington, Minnesota 55439
Phone: 952-831-0131
Fax: 913-438-7777
SSC

STRUCTURAL/CIVIL ENGINEER:

I hereby certify that this plan, specification, or report was prepared by me or under my direct supervision and that I am a duly Licensed Professional Engineer under the laws of the state of Minnesota.

Signature — MICHAEL L OWENS, Typed or Printed name
Date — 44062, Reg. NO.
Pages or sheets covered by this certification:
Per Responsible Discipline: STRUCTURAL/CIVIL EC

ELECTRICAL ENGINEER:

I hereby certify that this plan, specification, or report was prepared by me or under my direct supervision and that I am a duly Licensed Professional Engineer under the laws of the state of Minnesota.

Signature — SHELTON D KEIGLING, Typed or Printed name
Date 12-15-14 — 47757, Reg. NO.
Pages or sheets covered by this certification:
Per Responsible Discipline: ELECTRICAL E

DRAWING NOTICE:

THIS DRAWING HAS NOT BEEN PUBLISHED AND IS THE SOLE PROPERTY OF SSC, INC. AND IS LENT TO THE BORROWER FOR THEIR CONFIDENTIAL USE ONLY, AND IN CONSIDERATION OF THE LOAN OF THIS DRAWING, THE BORROWER PROMISES AND AGREES TO RETURN IT UPON REQUEST AND AGREES THAT IT WILL NOT BE REPRODUCED, COPIED, LENT OR OTHERWISE DISPOSED OF DIRECTLY OR INDIRECTLY, NOR USED FOR ANY PURPOSE OTHER THAN FOR WHICH IT IS FURNISHED.

SUBMITTALS

DESCRIPTION	DATE	BY	REV
ISSUED FOR REVIEW	09/27/13	DDS	A
ISSUED FOR REVIEW	12/09/13	JMB	B
ISSUED FOR REVIEW	12/17/13	PJW	C
ISSUED FOR CONSTRUCTION	09/12/14	PJW	0
REVISED SURVEY, FIBER EQUIPMENT	12/15/14	JMB	1

SITE NAME:
MN07 LEON WILLMAR

SITE NUMBER:
265819

SITE ADDRESS:
515 2ND STREET SW
WILLMAR, MINNESOTA
56201

SHEET DESCRIPTION:
SPECIFICATIONS (7 OF 7)

SSC #:

SHEET NUMBER:
SP-7

SITE NAME: MN07 Leon Willmar
SITE NUMBER:

LAND LEASE AGREEMENT

This Agreement, made this _____ day of _____, 20___, between the City of Willmar, a Minnesota Municipal Corporation, with its principal offices located at 333 6th Street SW, Willmar, Minnesota, 56201, hereinafter designated LESSOR and Midwest Wireless Communications L.L.C. d/b/a Verizon Wireless, with its principal office located at One Verizon Way, Mail Stop 4AW100, Basking Ridge, New Jersey 07920 (telephone number 866-862-4404), hereinafter designated LESSEE. The LESSOR and LESSEE are at times collectively referred to hereinafter as the "Parties" or individually as the "Party".

NOW, THEREFORE, in consideration of the mutual covenants and conditions below, and other good and valuable consideration, the receipt and sufficiency of which are hereby acknowledged, the Parties agree as follows:

1. PREMISES. LESSOR hereby leases to LESSEE a portion of that certain parcel of real property located at 515 2nd Street SW, Willmar, Kandiyohi County, State of Minnesota (the entirety of LESSOR's property is referred to hereinafter as the "Property" and is depicted on the survey attached hereto as Exhibit "A" attached hereto and made a part hereof). The portion of the Property being leased consists of an area containing approximately 1,100 square feet as depicted and labeled the "Land Space" on the survey attached hereto as Exhibit A, and as legally described on Exhibit "B" (the "Leased Premises").

2. PURPOSE. The purpose of this Agreement is for the installation and maintenance of a communication antenna facility and related and incidental equipment (collectively referred to as "Equipment", as defined below). A site plan and design specifications for the Equipment showing the exact location of the same with the location, appearance and orientation of the Equipment on the Leased Premises shall be approved by the LESSOR prior to the commencement of construction, and shall be attached hereto as Exhibit C. Equipment shall consist of the following:

a. A tower of monopole design, not to exceed 100 feet in height as measured from grade, unless approved by LESSOR, constructed and designed in structure and color to blend into the environment, more particularly depicted and described in Exhibit C, or as may be updated from time to time;

b. Antennas attached to the tower, as depicted and described in Exhibit C or as may be updated from time to time;

c. Cable, utility wires, conduits, pipes and appurtenances connected to the tower and located near the tower base, as depicted and described in Exhibit C or as may be updated from time to time;

d. Equipment shelter containing communications, climate control, and electrical and other equipment, fixtures and personal property related to the operation and maintenance of LESSEE's facility as depicted and described in Exhibit C or as may be updated from time to time;

e. An eight (8') foot tall maintenance free security fence as depicted and described in Exhibit C or as may be updated from time to time.

In addition, this Agreement grants the non-exclusive right for ingress, egress and utilities, seven (7) days a week, twenty-four (24) hours a day, on foot or in motor vehicle, including trucks, over, under, or along a right-of-way extending from the nearest public right-of-way, together with the non-exclusive right (the "Rights of Way") for ingress and egress, seven (7) days a week twenty-four (24) hours a day, on foot or motor vehicle, from 2nd Street SW, to the Leased Premises for access, all as legally described on the attached Exhibit D attached hereto and made a part hereof. In the event any public utility is unable to use the Rights of Way, the LESSOR hereby agrees to grant an additional right-of-way either to the LESSEE or to the public utility at no cost to the LESSEE.

3. TERM. This Agreement shall be effective as of the date of execution by both Parties, provided, however, the initial term shall be for five (5) years and shall commence on the Commencement Date (as hereinafter defined) at which time rental payments shall commence in accordance with Paragraph 6. The Agreement shall commence upon the first (1st) day of the month following commencement of construction (the "Commencement Date"). The parties shall acknowledge in writing the Commencement Date.

4. EXTENSIONS. This Agreement shall automatically be extended for three (3) additional five (5) year terms unless LESSEE terminates it at the end of the then current term by giving LESSOR written notice of the intent to terminate at least six (6) months prior to the end of the then current term. LESSOR may, on one occasion at any time after the first extension term, and upon twelve months' prior written notice to LESSEE, require LESSEE to relocate to another location on LESSOR's Property (herein referred to as the "Alternate Location") at LESSOR's expense as reasonably necessary to accomplish the development of the Property provided (a) the Alternate Location is similar to LESSEE's current Premises in size and is compatible for LESSEE's use; and (b) LESSEE's service will not be interrupted and LESSEE shall be allowed if necessary to place a temporary cell site and antenna structure on LESSOR's Property during relocation.

5. ADDITIONAL EXTENSIONS. If at the end of the third (3rd) five (5) year extension term this Agreement has not been terminated by either Party by giving to the other written notice of an intention to terminate it at least twelve (12) months prior to the end of such term, this Agreement shall continue in force upon the same covenants, terms and conditions, specifically including the annual rental increase as provided in Paragraph 6, for a further term of five (5) years and for five (5) year terms thereafter until terminated by either Party by giving to the other written notice of its intention to so terminate at least twelve (12) months prior to the end of such term.

6. RENT. Annual rent of fifteen thousand dollars ($15,000.00) shall be due within thirty (30) days of the written acknowledgement of the Commencement Date, and on the anniversary date of the Commencement Date ("Anniversary Date") of the Initial Term and during any Renewal Terms, LESSEE shall pay to LESSOR the annual rent in advance. Rent not paid and received by LESSOR within fifteen days after notice from LESSOR shall be subject to a ten percent (10%) late fee and possible termination as provided in Paragraph 25 below. Rent

for any fractional month at the beginning or at the end of the Initial Term or a Renewal Term shall be prorated. The annual rent shall increase on each anniversary of the Commencement Date by three percent (3%) from the previous year's rental rate.

Upon agreement of the Parties, LESSEE may pay rent by electronic funds transfer and in such event, LESSOR agrees to provide to LESSEE bank routing information for such purpose upon request of LESSEE.

7. LESSOR SPACE; REIMBURSEMENT. LESSEE shall make available to the police, fire and emergency services of LESSOR space on LESSEE's communications tower for existing equipment at no charge to LESSOR, and shall construct the tower and install the equipment so as to accommodate such facilities of LESSOR, and make reasonable effort to accommodate new emergency communications equipment provided by LESSOR. As to any future tower sublessees pursuant to Paragraph 21, their respective installations will be permitted only at such locations that will not cause interference with LESSOR's existing operations on the tower. Additionally, LESSEE shall take care to construct and install the Equipment in a manner that will not to impair the operation and performance of LESSOR's antennas and equipment currently located on LESSOR's existing tower at the Willmar Fire Station, specifically including the antenna that provides the Willmar Fire Station internet access via a wireless connection to Willmar City Hall, until such time such antennas and equipment are relocated to the monopole tower to be constructed on the leased premises as depicted and detailed on Exhibit C attached hereto.

LESSEE further agrees to pay LESSOR a one-time, lump sum payment in the sum of Seven Thousand Three Hundred Eighty One and 36/100 Dollars ($7,381.36), which shall be due and payable within sixty days of the full execution of this Agreement and which shall be non-refundable. The Parties understand and agree that this payment is being made for the purpose of reimbursing LESSOR for the entirety of LESSOR's costs associated with LESSOR's purchase and installation of its equipment.

8. ADDITIONAL RENT. As additional consideration for this Agreement, LESSEE further agrees to pay LESSOR a one-time, lump sum payment in the sum of Three Thousand and No/100 Dollars ($3,000.00) as additional rent, which shall be due and payable within thirty (30) days of the full execution of this Agreement and which shall be non-refundable. The parties understand and agree that this additional rent is being paid for the purpose of reimbursing LESSOR for its attorney costs.

9. OPERATION; MAINTENANCE; IMPROVEMENTS; USE; GOVERNMENTAL APPROVALS.

a. Use of the Premises. LESSEE shall use the Premises for the purpose of constructing, maintaining, repairing and operating a communications facility and uses incidental thereto in accordance with all federal, state and local regulations. Any damage done by LESSEE to the Leased Premises or to LESSOR's Property during installation, modification or normal operations shall be repaired at LESSEE's expense. LESSEE shall ensure that LESSEE shall provide LESSOR with as-built drawings of the Equipment installed on the Leased Premises, which show the actual location of all Equipment. Said drawings shall be accompanied by a

complete and detailed inventory of all Equipment and personal property actually placed on the Leased Premises. All improvements and modifications shall be at LESSEE's expense and their installation shall be at the discretion and option of LESSEE, subject to the appropriate approvals as required by this Agreement and by the LESSOR. LESSEE shall have the right to replace, repair, add or otherwise modify its Equipment or any portion thereof in accordance with all applicable federal, state and local laws and regulations, specifically including the Willmar City Code and zoning ordinance. Before adding any Equipment to the tower, LESSEE shall submit plans and specifications to the LESSOR for the LESSOR's written approval, which approval shall not be unreasonably withheld, conditioned or delayed. In the event the LESSOR does not either (i) object to the plans in writing or (ii) furnish the LESSEE with written approval, within fifteen (15) days of the date of submission of the plans, LESSOR will be deemed to have approved them. LESSEE will maintain the Leased Premises in good condition. LESSOR will maintain the property, excluding the Leased Premises, in good condition.

b. Nuisance. LESSEE shall keep the Leased Premises and Equipment free of debris and anything of a dangerous, noxious or offensive nature and in compliance with all applicable laws. Only emergency construction will be permitted before 8:00 a.m. or after 8:00 p.m.

c. Landscaping. At LESSOR's discretion, LESSEE shall landscape the site to screen specified Equipment from adjacent properties and the street. All disturbed areas will be restored to a condition reasonably acceptable to LESSOR.

d. Security. LESSEE shall have sole responsibility for the security of its Equipment and personal property, and any other leasehold improvements, and shall install at its sole expense a motion-sensitive security light on the equipment building as approved by LESSOR.

e. Additional Expenses. Intentionally omitted.

f. Tower Marking and Lightning Protection. LESSEE shall be responsible for compliance with all FAA and FCC tower marking/lighting requirements related to the Leased Premises. LESSEE shall be responsible for protecting its Equipment from the threat and damage due to lightning and related electrical/atmospheric interference. LESSEE shall notify LESSOR of any proposal to install the foregoing on the Leased Premises and such installation shall be approved by LESSOR prior to installation thereof.

g. Hazardous Materials. LESSEE represents and warrants that its use of the Leased Premises will not generate and LESSEE will not store or dispose of on the Leased Premises, nor transport to or over the Property, any Hazardous Materials, unless LESSEE specifically informs LESSOR thereof in writing twenty-four hours prior to such storage, disposal or transport, or otherwise as soon as LESSEE becomes aware of the existence of Hazardous Materials on the Leased Premises. LESSOR and LESSEE acknowledge that LESSEE shall be utilizing and maintaining on the Property sealed batteries, propane/diesel/gasoline, HVAC system, and a halon/FM200 fire suppression system and that the use and maintenance of such items shall not constitute a violation or breach of the preceding sentence of this Paragraph. The obligations of this Paragraph shall survive the expiration or other termination of this Lease.

h. Governmental Approval Contingency. It is understood and agreed that LESSEE's ability to use the Premises is contingent upon its obtaining after the execution date of this Agreement all of the certificates, permits and other approvals (collectively the "Governmental Approvals") that may be required by any Federal, State or Local authorities as well as satisfactory soil boring tests which will permit LESSEE use of the Premises as set forth above. LESSOR shall take no action intended to adversely affect the status of the Property with respect to the proposed use thereof by LESSEE. In the event that (i) any of such applications for such Governmental Approvals should be finally rejected; (ii) any Governmental Approval issued to LESSEE is canceled, expires, lapses, or is otherwise withdrawn or terminated by governmental authority; or (iii) any soil boring tests indicate that the Leased Premises are unsuitable for the proposed use thereof by LESSEE, LESSEE shall have the right to terminate this Agreement. Notice of LESSEE's exercise of its right to terminate shall be given to LESSOR in writing by certified mail, return receipt requested, and shall be effective upon the receipt of such notice by LESSOR, subject to the condition that any rentals owing to LESSOR on such termination date shall be paid to LESSOR by LESSEE before such termination may be effective. All rentals paid to said termination date shall be retained by LESSOR. Upon such termination, this Agreement shall be of no further force or effect except to the extent of the representations, warranties and indemnities made by each Party to the other hereunder. Otherwise, the Parties shall have no further obligations including the payment of money, to each other. If the LESSEE, in its sole discretion, determines that it is unable to use the Property for its intended purpose or the LESSEE determines that the Leased Premises are no longer technically compatible for its intended use, LESSEE may terminate this Agreement pursuant to Paragraph 25 of this Agreement.

i. Interference Study. Before obtaining a building permit, LESSEE must pay for the reasonable cost of (i) a radio frequency interference study carried out by an independent and qualified professional selected by the LESSEE showing that LESSEE's intended use will not interfere with any existing communications equipment. If the study finds that there is a potential for interference that cannot be reasonably remedied, LESSEE may terminate this Agreement immediately and LESSOR shall refund the rental paid pursuant to Paragraph 8 to LESSEE with no further obligation. Otherwise, LESSEE shall not install its equipment until it provides an interference study showing that LESSEE's intended use will not interfere with any existing communications equipment.

10. CONSTRUCTION. LESSEE will construct and operate the Equipment on the Leased Premises depicted and listed on the attached Exhibit C.

11. INDEMNIFICATION. Subject to Paragraph 12 below, each Party shall indemnify and hold the other harmless against any and all claims, costs, losses, expenses, demands, actions, or causes of action resulting from or arising out of the use and occupancy of the Leased Premises, the Property or the Equipment by the Party, its employees, contractors or agents, including, without limitation, reasonable attorney's fees and other costs and expenses of litigation, which may be asserted against or incurred by the Party or for which Party may be liable in the performance of this Agreement, except to the extent such claims or damages may be due to or caused by the acts or omissions of the other Party, or its employees, contractors or agents. This Agreement to indemnify and hold harmless does not constitute a waiver by

LESSOR of limitations on liability provided by any applicable Minnesota law, including Minnesota Statutes, Chapter 466.

12. INSURANCE.

a. LESSEE's Required Coverages.

i. Comprehensive General Liability; Worker's Compensation and Unemployment Compensation Coverage. LESSEE shall carry and maintain adequate insurance to protect the parties against any and all claims, demands, actions, judgments, expenses, and liabilities which may arise out of or result directly or indirectly from LESSEE's use of the Leased Premises. Any applicable policies shall list the City as an additional insured and shall provide that it will be the primary coverage. The insurance coverage must include, at least, occurrence form Comprehensive General Liability coverage, including hazards of premises/operation coverage, bodily injury, property damage-third party, personal injury, independent contractors liability, products/completed operations coverage, and contractual liability coverage. The LESSEE must maintain the aforementioned comprehensive general liability coverage with limits of liability not less than $1,000,000 each occurrence; $1,000,000 personal and advertising injury; $2,000,000 general aggregate, and $2,000,000 products and completed operations aggregate. These limits may be satisfied by the comprehensive general liability coverage or in combination with an umbrella or excess liability policy, provided coverage afforded by the umbrella or excess policy are no less than the underlying comprehensive general liability coverages. LESSEE shall maintain Completed Operations coverage for a minimum of two years after the construction is completed. LESSEE shall also maintain Worker's Compensation and Unemployment Compensation coverage for itself and its employees as required under the laws of the State of Minnesota providing Employer's Liability coverage with limits of not less than $500,000 Bodily Injury each accident, $500,000 Bodily Injury by disease, policy limit, and $500,000 Bodily Injury by disease, each employee. LESSOR agrees that it is subject to Minnesota Statutes Section 466.

ii. Automobile Liability. The LESSEE must also carry automobile liability coverage. Coverage shall afford total liability limits for bodily injury liability and property damage liability in the amount of $1,000,000 per accident. The liability limits may be afforded under the commercial policy, or in combination with an umbrella or excess liability policy, provided coverages afforded by the umbrella excess policy are no less than the underlying commercial auto liability coverage. Coverage shall be provided for bodily injury and property damage for the ownership, use, maintenance or operation of all owned, non-owned and hired automobiles. The commercial automobile policy shall include at least statutory personal injury protection, uninsured motorists and underinsured motorist coverages.

iii. LESSEE Owned Property Insurance. LESSEE must keep in force during the term and any renewals of the Lease a policy covering damage to its own property at the Leased Premises. The amount of coverage shall be sufficient to replace the damaged property, loss of use and comply with any ordinance or law requirements.

iv. Hazardous Materials Coverage. LESSEE must carry sufficient coverage, to the reasonable satisfaction of LESSOR, for damage caused by hazardous materials.

v. Evidence of Insurance. Lessee shall provide, prior to the commencement date and annually during the initial term and any renewal of the Lease term, and promptly at any other time upon the request of LESSOR, evidence of the required insurance in the form of a Certificate of Insurance issued by an insurance company (rated A+ or better by Best Insurance Guide) licensed to do business in the State of Minnesota, which includes all coverages required above.

vi. Adjustment to Insurance Coverage Limits. The coverage limits set forth herein shall be increased from time to time as reasonably required by LESSOR.

b. LESSOR's Required Coverages. LESSOR agrees that at its own cost and expense, it will maintain commercial general liability and property liability insurance with limits not less than $1,500,000 in any one occurrence and $2,000,000 general aggregate; or $3,000,000 combined single limit coverage for bodily injury and property damage. LESSOR agrees that it will include the other Party as an additional insured.

c. Waiver of Subrogation. The Parties hereby waive and release any and all rights of action for negligence against the other which may hereafter arise on account of damage to the Leased Premises or to the Property, resulting from any fire, or other casualty of the kind covered by standard fire insurance policies with extended coverage, regardless of whether or not, or in what amounts, such insurance is now or hereafter carried by the Parties, or either of them. These waivers and releases shall apply between the Parties and they shall also apply to any claims under or through either Party as a result of any asserted right of subrogation. All such policies of insurance obtained by either Party concerning the Premises or the Property shall waive the insurer's right of subrogation against the other Party.

13. UTILITIES. LESSEE shall separately meter charges for the consumption of electricity and other utilities associated with its use of the Leased Premises and shall promptly pay all costs associated therewith.

14. INTERFERENCE. LESSEE shall not interfere with LESSOR's use of the Property for the purposes of maintaining fire or other public safety facilities thereon, or with any new or replacement equipment LESSOR may subsequently install on the LESSEE's monopole communications tower pursuant to Paragraph 7 herein in substantially the same locations as specified on Exhibit C attached hereto, and agrees to cease all actions that unreasonably and

materially interfere with LESSOR's use thereof no later than five (5) business days after receipt of written notice of the interference from LESSOR. In the event that LESSEE's cessation of action is material to LESSEE's use of the Leased Premises and such cessation frustrates LESSEE's use of the Leased Premises, within LESSEE's sole discretion, LESSEE shall have the immediate right to terminate this Agreement, The Parties acknowledge that there will not be an adequate remedy at law for noncompliance with the provisions of this Paragraph and therefore, either Party shall have the right to equitable remedies, such as, without limitation, injunctive relief and specific performance.

15. REMOVAL UPON TERMINATION. Subject to LESSOR's option to assume title to, possession of and responsibility for the tower on the Leased Premises pursuant to Paragraph 25 (b)(iv), LESSEE shall, within ninety (90) days after the termination or expiration date of this Agreement, remove its Equipment from the Leased Premises and to repair the Leased Premises and restore the site to LESSOR's satisfaction. In the event that LESSEE's Equipment is not removed to the reasonable satisfaction of the LESSOR, and the site is not restored to the reasonable satisfaction of LESSOR, LESSOR may, at its sole discretion, remove and store LESSEE's Equipment and restore the Leased Premises at LESSEE's sole expense. If LESSOR removes the Equipment, LESSOR must give written notice to the LESSEE in accordance with Paragraph 22 of this Agreement.

16. RIGHTS UPON SALE/LIMITED RIGHT OF FIRST REFUSAL. Should LESSOR, at any time during the term of this Agreement, decide to sell or transfer all or any part of the Property to a purchaser other than LESSEE, such sale or transfer shall be under and subject to this Agreement. If LESSOR elects, during the term to sell, otherwise transfer or grant to a third party by easement or other legal instrument an interest in and to any portion of the Property occupied by LESSEE for the primary purpose of operating and maintaining communications facilities or the management thereof, with or without an assignment of this Agreement to such third party, LESSEE shall have the right of first refusal to meet any bona fide offer of sale or transfer on the same terms and conditions of such offer. If LESSEE fails to meet such bona fide offer within thirty (30) days after written notice thereof from LESSOR, LESSOR may sell or grant the easement or interest in the Property or portion thereof to such third person in accordance with the terms and conditions of such third party offer.

17. QUIET ENJOYMENT. LESSOR covenants that LESSEE, on paying the rent and performing the covenants herein, shall peaceably and quietly have, hold and enjoy the Premises.

18. TITLE. LESSOR covenants that LESSOR is seized of good and sufficient title and interest to the Property and has full authority to enter into and execute this Agreement.

19. INTEGRATION. It is agreed and understood that this Agreement contains all agreements, promises and understandings between LESSOR and LESSEE and that no verbal or oral agreements, promises or understandings shall be binding upon either LESSOR or LESSEE in any dispute, controversy or proceeding at law, and any addition, variation or modification to this Agreement shall be void and ineffective unless made in writing signed by the Parties. In the event any provision of the Agreement is found to be invalid or unenforceable, such finding shall not affect the validity and enforceability of the remaining provisions of this Agreement. The failure of either Party to insist upon strict performance of any of the terms or conditions of this

Agreement or to exercise any of its rights under the Agreement shall not waive such rights and such Party shall have the right to enforce such rights at any time and take such action as may be lawful and authorized under this Agreement, in law or in equity.

20. GOVERNING LAW. This Agreement and the performance thereof shall be governed, interpreted, construed and regulated by the Laws of the State of Minnesota.

21. ASSIGNMENT/SUBLEASE.

a. This Agreement may be sold, assigned or transferred by the LESSEE without any approval or consent of the LESSOR to the LESSEE's principal, affiliates, subsidiaries of its principal or to any entity which acquires all or substantially all of LESSEE's assets in the market defined by the Federal Communications Commission in which the Property is located by reason of a merger, acquisition or other business reorganization. For purposes of this subparagraph, a party shall be an "affiliate" of LESSEE only if the party controls, is controlled by, or is under common control with, LESSEE, and "control" shall mean voting control—via legal, beneficial or equitable ownership; a voting agreement; or otherwise—of securities (or other interest in) the organization having more than 51 percent of the aggregate right to vote for the organization's board of directors or comparable governing body.

b. As to other parties, this Agreement may not be sold, assigned or transferred without the written consent of the LESSOR, which such consent will not be unreasonably withheld, delayed or conditioned. No change of stock ownership, partnership interest or control of LESSEE or transfer upon partnership or corporate dissolution of LESSEE shall constitute an assignment hereunder. Any approved sublease under this subparagraph shall be subject to the provisions of this Agreement, and subject to the following additional terms and conditions:

i. LESSEE must first pay for an evaluation carried out by a qualified professional demonstrating to the satisfaction of LESSEE that (i) each additional antenna will not interfere with existing antennas or with proposed antennas with a higher priority.

ii. Any sublessee may be required to work with LESSOR to lease additional ground space rent.

iii. LESSOR shall be entitled to additional rent from LESSEE in the annual amount of five-thousand dollars ($5000.00) for each sublessee not leasing additional ground space from LESSOR. Rent shall be prorated for any partial year, and shall increase on each anniversary of this Agreement in proportion to the annual rental increase provided for in Paragraph 6.

22. NOTICES. All notices hereunder must be in writing and shall be deemed validly given if sent by certified mail, return receipt requested or by commercial courier, provided the courier's regular business is delivery service and provided further that it guarantees delivery to the addressee by the end of the next business day following the courier's receipt from the sender,

addressed as follows (or any other address that the Party to be notified may have designated to the sender by like notice):

LESSOR: City of Willmar
333 6th Street SW
Willmar, MN 56201
Attention: Information Systems Coordinator

LESSEE: Midwest Wireless Communications L.L.C.
d/b/a Verizon Wireless
180 Washington Valley Road
Bedminster, New Jersey 07921
Attention: Network Real Estate

Notice shall be effective upon actual receipt or refusal as shown on the receipt obtained pursuant to the foregoing.

23. SUCCESSORS. This Agreement shall extend to and bind the heirs, personal representative, successors and assigns of the Parties hereto.

24. RECORDING. LESSOR agrees to execute a Memorandum of this Agreement which LESSEE may record with the appropriate recording officer. The date set forth in the Memorandum of Lease is for recording purposes only and bears no reference to commencement of either the term of this Agreement or rent payments.

25. TERMINATION.

a. Except as otherwise provided herein, this Agreement may be terminated by either Party as follows:

i. By either Party upon a default of any covenant or term hereof by the other Party, which default is not cured within fifteen (15) days of receipt of written notice of default to the other Party if a monetary default and (30) days for any non-monetary default (without, however, limiting any other rights of the Party pursuant to any other provisions hereof) provided that if consented to by the non-defaulting Party, which consent shall not be unreasonably withheld, conditioned or delayed, the defaulting Party shall have such extended period as may be required beyond the thirty (30) days if the nature of the cure is such that it reasonably requires more than thirty (30) days and the party commences the cure within the thirty (30) day period and thereafter continuously and diligently pursues the cure to completion;

ii. By either Party, upon thirty days' written notice to the other Party, in the event the Federal Communications Commission or any other regulatory or governmental agency, body or entity having jurisdiction over LESSEE makes a determination that is final and non-appealable or which is affirmed and becomes final after the exhaustion of all available appeals concluding that LESSEE's use as set forth in this Agreement presents a material risk to the public health or safety;

iii. By LESSEE for cause if it is unable to obtain or maintain any license, permit or other governmental approval necessary for the construction and/or operation of the Equipment or LESSEE's business;

iv. By LESSEE for cause if the Leased Premises or Equipment is or becomes unacceptable for technological, design or engineering reasons or LESSEE is unable to use the Property for its intended purposes;

v. By LESSEE, if the Leased Premises is destroyed or damaged, without contributory fault of the LESSEE or its agents, so as, in LESSEE's judgment, to hinder its effective use of the Equipment, LESSEE may elect to terminate this Agreement upon thirty (30) days written notice to LESSOR;

vi. By LESSOR if LESSEE has failed to comply with applicable ordinances, state or federal laws or regulations, or any conditions attached to government approvals granted thereunder, after written notice from LESSOR of the failure and failing to cure within thirty (30) days of the notice, and subject to the extended period approved in writing pursuant to Paragraph 25 (a) (i).

b. Rent payments and Effect of Termination.

i. LESSEE shall be entitled to reimbursement of prepaid rent covering the period subsequent to the default, notice or damage or destruction for the termination pursuant to Paragraphs 25 (a) (i) (if LESSOR is in default), and Paragraphs 25 (a)(iii), 25 (a) (v) and 28 (a) (vi).

ii. LESSOR shall be entitled to payment of the balance of rent for the then current lease year for termination pursuant to Paragraphs 25 (a) (iv) and 25 (a) (vii).

iii. For termination pursuant to Paragraph 25 (a) (ii), LESSEE shall not be entitled to reimbursement of any prepaid rent.

iv. LESSOR shall be entitled to assume title to, possession and control of, and responsibility for operations and maintenance of the monopole pursuant to a quit claim bill of sale in a form attached as Exhibit E in the event that LESSEE terminates this Agreement under Paragraphs 25 (a) (iv) or 25 (c). LESSOR must exercise this right no later than ten (10) days after the effective date of the termination.

c. Annual Termination. Notwithstanding anything to the contrary contained herein, provided LESSEE is not in default hereunder and shall have paid all rents and sums due and payable to the LESSOR by LESSEE, LESSEE shall have the right to terminate this Agreement provided that three (3) months prior written notice is given to the LESSOR pursuant to Paragraph 22; LESSEE shall be entitled to reimbursement of any prepaid rent.

26. ENVIRONMENTAL.

a. LESSEE will be responsible for compliance with any and all environmental and industrial hygiene laws, including any regulations, guidelines, standards, or

policies of any governmental authority regulating or imposing standards of liability or standards of conduct with regard to any environmental or industrial hygiene condition or other matters as may now or at any time hereafter be in effect, that are now or were related to its activity conducted in or on the Leased Premises.

b. LESSEE agrees to hold harmless and indemnify LESSOR from, and to assume all duties, responsibilities, and liabilities at its cost and expense, (for payment of penalties, sanctions, forfeitures, losses, costs, or damages) and for responding to any action, notice claim, order, summons, citation directive, litigation, investigation, or proceeding which is related to LESSEE's failure to comply with any environmental or industrial hygiene law related to LESSEE's activity conducted in or on the Leased Premises, including without limitation any regulations, guidelines, standards, or policies of any governmental authority regulating or imposing standards of liability or standards of conduct with regard to any environmental or industrial hygiene conditions or matters as may now or hereafter be in effect and except to the extent such claims or damages may be due to or caused by the acts or omissions of LESSOR.

c. The indemnifications of this Paragraph specifically include reasonable costs, expenses, and fees incurred in connection with any investigation of Property conditions or any clean-up, remedial, removal, or restoration work required by any governmental authority. The provisions of this Paragraph will survive the expiration or termination of this Agreement.

27. CONDEMNATION. In the event of any condemnation of the Property, LESSEE may, at LESSEE's option, to be exercised in writing within fifteen (15) days after LESSOR shall have given LESSEE written notice of such taking (or in the absence of such notice, within fifteen (15) days after the condemning authority shall have taken possession) terminate this Agreement as of the date the condemning authority takes such possession, if such condemnation may reasonably be expected to disrupt LESSEE's operations at the Leased Premises for more than forty five (45) days. LESSEE may on its own behalf make a claim directly to the condemning authority in any condemnation proceeding involving the Property for losses related to the Equipment, its relocation costs and its damages and losses (but not for the loss of its leasehold interest). Any such notice of termination shall cause this Agreement to expire with the same force and effect as though the date set forth in such notice were the date originally set as the expiration date of this Agreement and the Parties shall make an appropriate adjustment as of such termination date with respect to payments due to the other under this Agreement, and LESSEE shall be entitled to reimbursement of any prepaid rent.

28. SUBMISSION OF AGREEMENT/PARTIAL INVALIDITY/AUTHORITY. The submission of this Agreement for examination does not constitute an offer to lease the Premises and this Agreement becomes effective only upon the full execution of this Agreement by the Parties. If any provision herein is invalid, it shall be considered deleted from this Agreement and shall not invalidate the remaining provisions of this Agreement. Each of the Parties hereto warrants to the other that the person or persons executing this Agreement on behalf of such Party has the full right, power and authority to enter into and execute this Agreement on such Party's behalf and that no consent from any other person or entity is necessary as a condition precedent to the legal effect of this Agreement.

29. APPLICABLE LAWS. LESSEE shall use the Leased Premises as may be required or as permitted by applicable laws, rules and regulations. LESSOR agrees to keep the Property in conformance with all applicable laws, rules and regulations and agrees to reasonably cooperate with the LESSEE regarding any compliance required by the LESSEE with respect to its use of the Leased Premises.

30. GENERAL TERMS AND CONDITIONS.

a. Survival. The provisions of the Agreement relating to indemnification from one Party to the other Party shall survive any termination or expiration of this Agreement. Additionally, any provisions of this Agreement which require performance subsequent to the termination or expiration of this Agreement shall also survive such termination or expiration.

b. Captions. The captions contained in this Agreement are inserted for convenience only and are not intended to be part of the Agreement. They shall not affect or be utilized in the construction or interpretation of the Agreement.

c. Modifications/Amendment. Any alterations, variations, modifications, amendments or waivers of the provisions of this Agreement shall only be valid when they have been reduced to writing, and signed by authorized representatives of the Parties.

d. Records—Availability and Retention. If applicable, LESSEE agrees to comply with Minn. Stat. § 16C.05, subd. 5.

e. Data Practices. The PARTIES acknowledge that this Agreement is subject to the requirements of Minnesota's Government Data Practices Act, Minnesota Statutes, Section 13.01 *et seq*.

f. Interest by Public Officials. No elected official, officer, or employee of the City of Willmar shall during his or her tenure or employment and for one year thereafter, have any interest, direct or indirect, in this Agreement or the proceeds thereof.

Signatures on following page

Remainder of page intentionally left blank

IN WITNESS WHEREOF, the Parties hereto have set their hands and affixed their respective seals the day and year written below.

LESSOR:

CITY OF WILLMAR

By: _____
Name: Marv Calvin
Its: Mayor

Attest:

By: _____
Name: Charlene Stevens
Its: City Administrator

LESSEE:

Midwest Wireless Communications L.L.C.
d/b/a Verizon Wireless
By: Alltel Communications, LLC, its Sole Member

By: _____
Lynn Ramsey
Its: Area Vice President Network

Date: _____

Remainder of page intentionally left blank

Exhibit A

(Survey of Lessor's Property)

SITE SURVEY

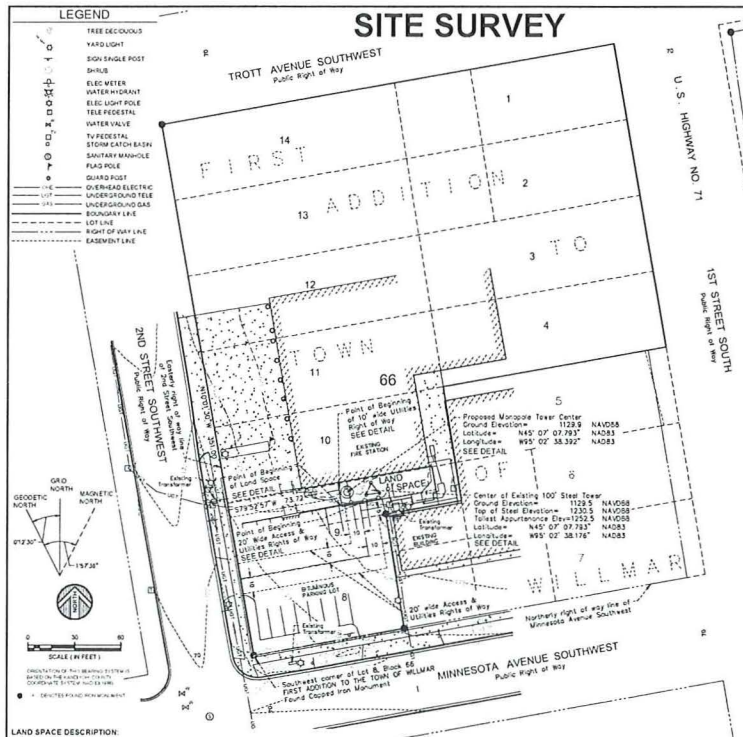

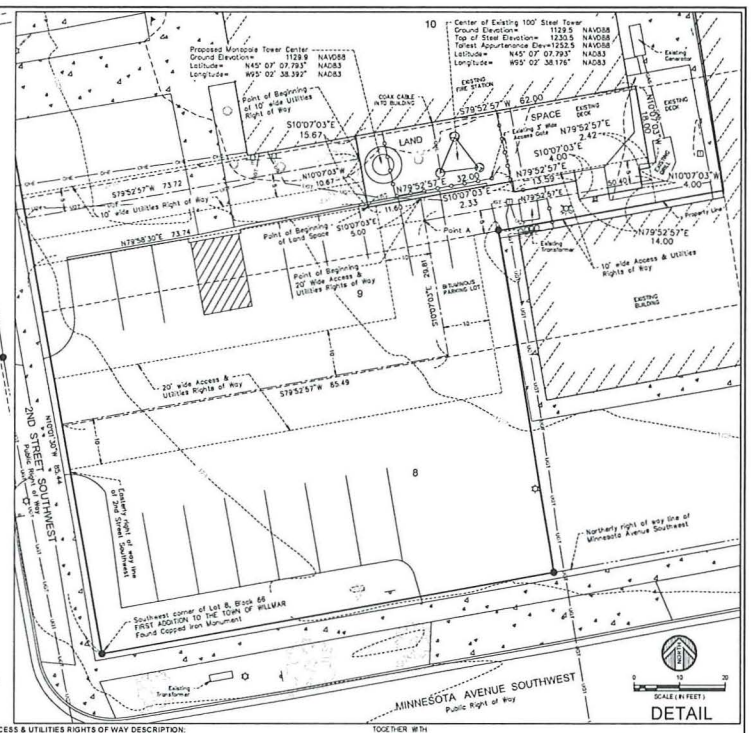

LAND SPACE DESCRIPTION:

That part of Lots 9 and 10, Block 66, FIRST ADDITION TO TOWN OF WILLMAR, according to the recorded plat thereof, Kandiyohi County, Minnesota, described as follows:

Commencing at the southwest corner of Lot 8 said Block 66; thence North 10 degrees 01 minutes 30 seconds West along the easterly right of way line of 2nd Street Southwest, a distance of 85.44 feet; thence North 79 degrees 58 minutes 30 seconds East, a distance of 73.74 feet to the Point of Beginning of the land space to be described; thence North 79 degrees 52 minutes 57 seconds East, a distance of 32.00 feet; thence South 10 degrees 07 minutes 03 seconds East, a distance of 2.33 feet; thence North 79 degrees 52 minutes 57 seconds East, a distance of 13.59 feet; thence South 10 degrees 07 minutes 03 seconds East, a distance of 4.00 feet; thence North 79 degrees 52 minutes 57 seconds East, a distance of 14.00 feet; thence North 10 degrees 07 minutes 03 seconds West, a distance of 4.00 feet; thence North 79 degrees 52 minutes 57 seconds East, a distance of 2.42 feet; thence North 10 degrees 07 minutes 03 seconds West, a distance of 18.00 feet; thence South 79 degrees 52 minutes 57 seconds West, a distance of 62.00 feet; thence South 10 degrees 07 minutes 03 seconds East, a distance of 15.67 feet to the Point of Beginning.

UTILITIES RIGHT OF WAY DESCRIPTION:

A 10.00 wide right of way for utility purposes over, under and across Lots 9 and 10, Block 66, FIRST ADDITION TO TOWN OF WILLMAR, according to the recorded plat thereof, Kandiyohi County, Minnesota, the centerline of said right of way is described as follows:

Commencing at the southwest corner of Lot 8 said Block 66; thence North 10 degrees 01 minutes 30 seconds West along the easterly right of way line of 2nd Street Southwest, a distance of 85.44 feet; thence North 79 degrees 58 minutes 30 seconds East, a distance of 73.74 feet; thence North 10 degrees 07 minutes 03 seconds West, a distance of 10.67 feet to the Point of Beginning of the centerline to be described; thence South 79 degrees 52 minutes 57 seconds West, a distance of 73.72 feet to said easterly right of way line of 2nd Street Southwest and said centerline there terminating.

The sidelines of said right of way shall be shortened or lengthened to terminate at said easterly right of way line of 2nd Street Southwest.

ACCESS & UTILITIES RIGHTS OF WAY DESCRIPTION:

A 20.00 wide right of way for ingress, egress and utility purposes over, under and across Lots 8 and 9, Block 66, FIRST ADDITION TO TOWN OF WILLMAR, according to the recorded plat thereof, Kandiyohi County, Minnesota, the centerline of said right of way is described as follows:

Commencing at the southwest corner of Lot 8 said Block 66; thence North 10 degrees 01 minutes 30 seconds West along the easterly right of way line of 2nd Street Southwest, a distance of 85.44 feet; thence North 79 degrees 58 minutes 30 seconds East, a distance of 73.74 feet; thence North 79 degrees 52 minutes 57 seconds East, a distance of 11.60 feet to the Point of Beginning of the centerline to be described; thence South 10 degrees 07 minutes 03 seconds East, a distance of 5.00 feet to a point hereinafter referred to as Point "A"; thence continue South 10 degrees 07 minutes 03 seconds East, a distance of 29.81 feet; thence South 79 degrees 52 minutes 57 seconds West, a distance of 85.49 feet to said easterly right of way line of 2nd Street Southwest and said centerline there terminating.

The sidelines of said right of way shall be shortened or lengthened to terminate at said easterly right of way line of 2nd Street Southwest.

TOGETHER WITH

A 10.00 foot wide right of way for ingress, egress and utility purposes over, under and across said Lots 8 and 9, the centerline of said right of way is described as follows:

Beginning at previously described Point "A"; thence North 78 degrees 52 minutes 57 seconds East, a distance of 50.40 feet and said centerline there terminating.

PARENT PARCEL DESCRIPTION: (per U.S. Title Solutions File No. 48262-MN1405-5020, dated 5/30/14.)

Block 66, except Lots 5, 6, 7 and the East 50 feet of Lot 8 and except the east 50 feet of the S1/2 of Lot 9, First Addition to the City of Willmar.

SCHEDULE "B" EXCEPTIONS: (per U.S. Title Solutions File No. 48262-MN1405-5020, dated 5/30/14.)

8.) Map – First Addition to Town of Willmar
The Plat of FIRST ADDITION TO TOWN OF WILLMAR is as shown on the survey.

SURVEYOR NOTE

1.) Utilities are per observed evidence and from markings per GOPHER STATE ONE CALL Locate Request Ticket No. 130981827, dated April 8th, 2013.

2.) The Proposed Land Space together with all Access & Utility Rights of Way are within the area described in the Property Description contained herein.

SSC

SITE NAME: MN07 LEON WILLMAR

Kandiyohi, MN

No	Date	REVISIONS	By	CHK	APPD
3	10/14/14	ADDED 10 WIDE UTILITIES RIGHT OF WAY	THD	SMK	BTB
2	8/20/14	REVISED LAND SPACE/ACCESS & UTILITY RIGHT OF WAY	EMK	BTB	BTB
1	6/11/14	UPDATED TITLE COMMITMENT	SMK	BTB	BTB

FIELD WORK 4/12/13 | CHECKED BY: BTB | DRAWN BY: JMB/SMK/THD

I HEREBY CERTIFY THAT THIS DOCUMENT WAS PREPARED BY ME OR UNDER MY DIRECT SUPERVISION AND THAT I AM A DULY LICENSED LAND SURVEYOR UNDER THE LAWS OF THE STATE OF MINNESOTA

SIGNATURE: Bryan T. Balcome
BRYAN T. BALCOME, L.S.
DATE: 2/27/14 LICENSE # 42594

FULL SCALE ON 22X34
HALF SCALE ON 11X17

0494A0653.000

WIDSETH SMITH NOLTING
Engineering
Architecture
Surveying
Environmental

Exhibit B

Legal Description of Leased Premises

LAND SPACE DESCRIPTION:

That part of Lots 9 and 10, Block 66, FIRST ADDITION TO TOWN OF WILLMAR, according to the recorded plat thereof, Kandiyohi County, Minnesota, described as follows:

> Commencing at the southwest corner of Lot 8 said Block 66; thence North 10 degrees 01 minutes 30 seconds West along the easterly right of way line of 2nd Street Southwest, a distance of 85.44 feet; thence North 79 degrees 58 minutes 30 seconds East, a distance of 73.74 feet to the Point of Beginning of the land space to be described; thence North 79 degrees 52 minutes 57 seconds East, a distance of 32.00 feet; thence South 10 degrees 07 minutes 03 seconds East, a distance of 2.33 feet; thence North 79 degrees 52 minutes 57 seconds East, a distance of 13.59 feet; thence South 10 degrees 07 minutes 03 seconds East, a distance of 4.00 feet; thence North 79 degrees 52 minutes 57 seconds East, a distance of 14.00 feet; thence North 10 degrees 07 minutes 03 seconds West, a distance of 4.00 feet; thence North 79 degrees 52 minutes 57 seconds East, a distance of 2.42 feet; thence North 10 degrees 07 minutes 03 seconds West, a distance of 18.00 feet; thence South 79 degrees 52 minutes 57 seconds West, a distance of 62.00 feet; thence South 10 degrees 07 minutes 03 seconds East, a distance of 15.67 feet to the Point of Beginning.

Exhibit C

(Equipment and Design Specifications)

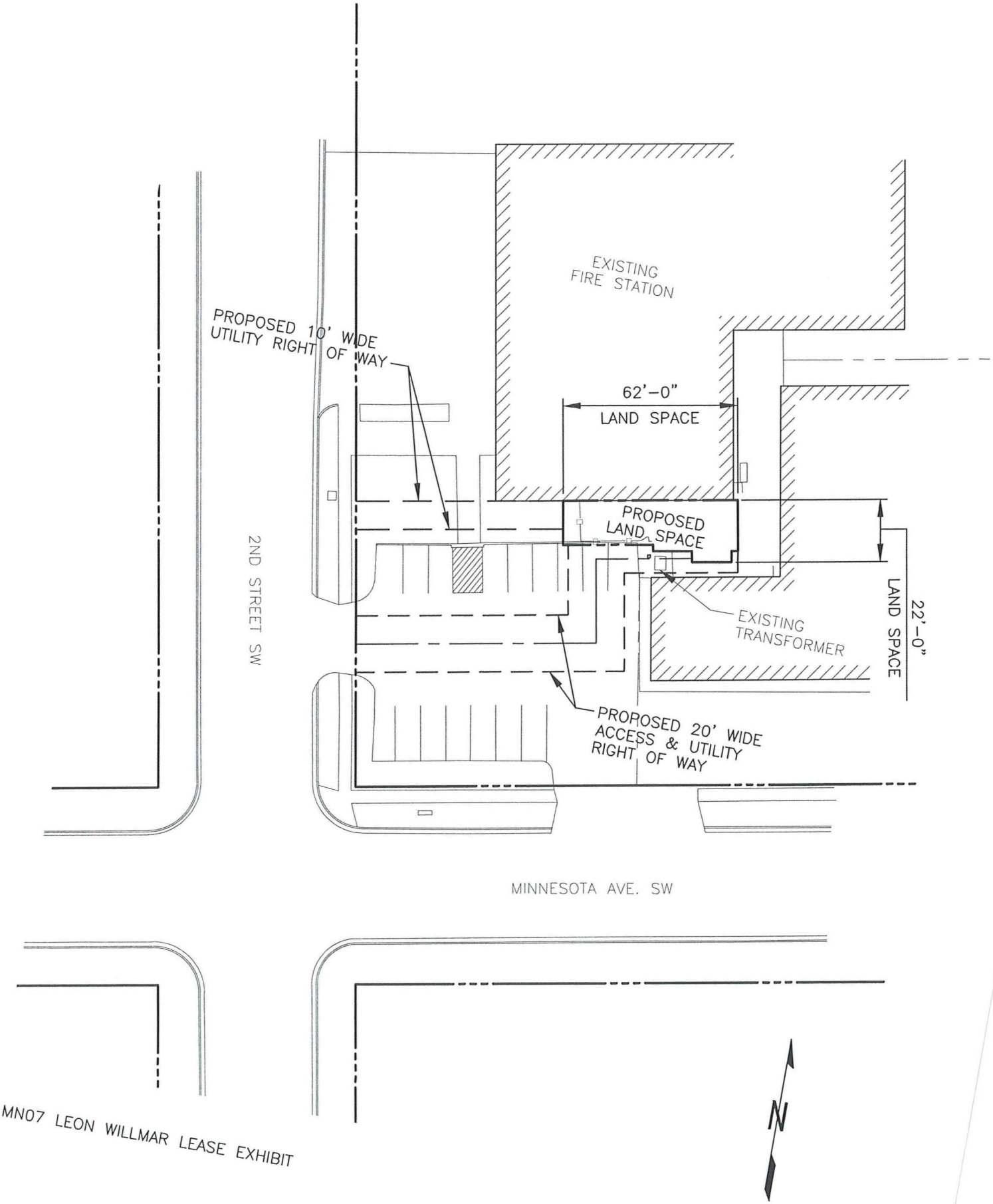

MN07 LEON WILLMAR LEASE EXHIBIT

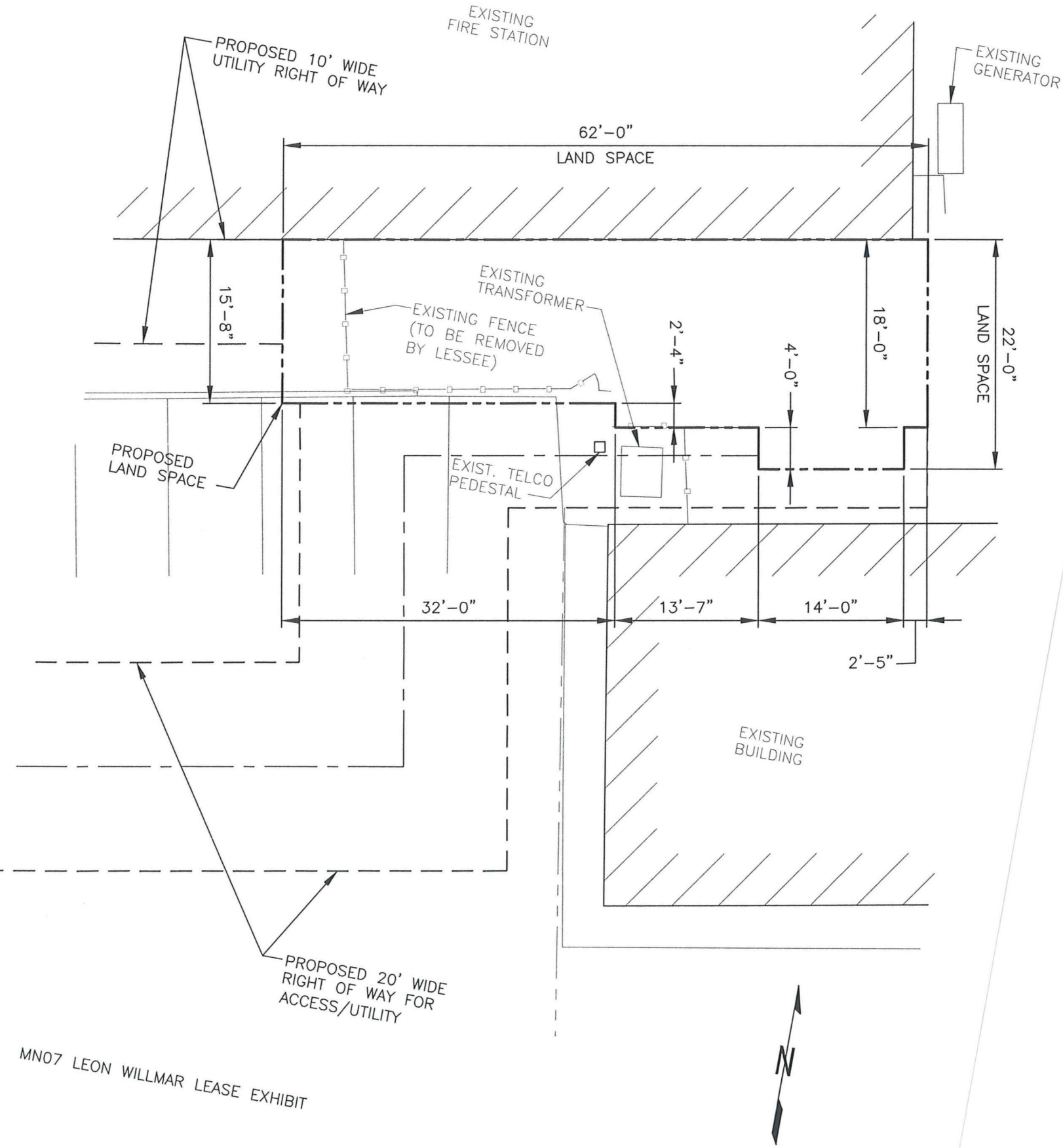

MN07 LEON WILLMAR LEASE EXHIBIT

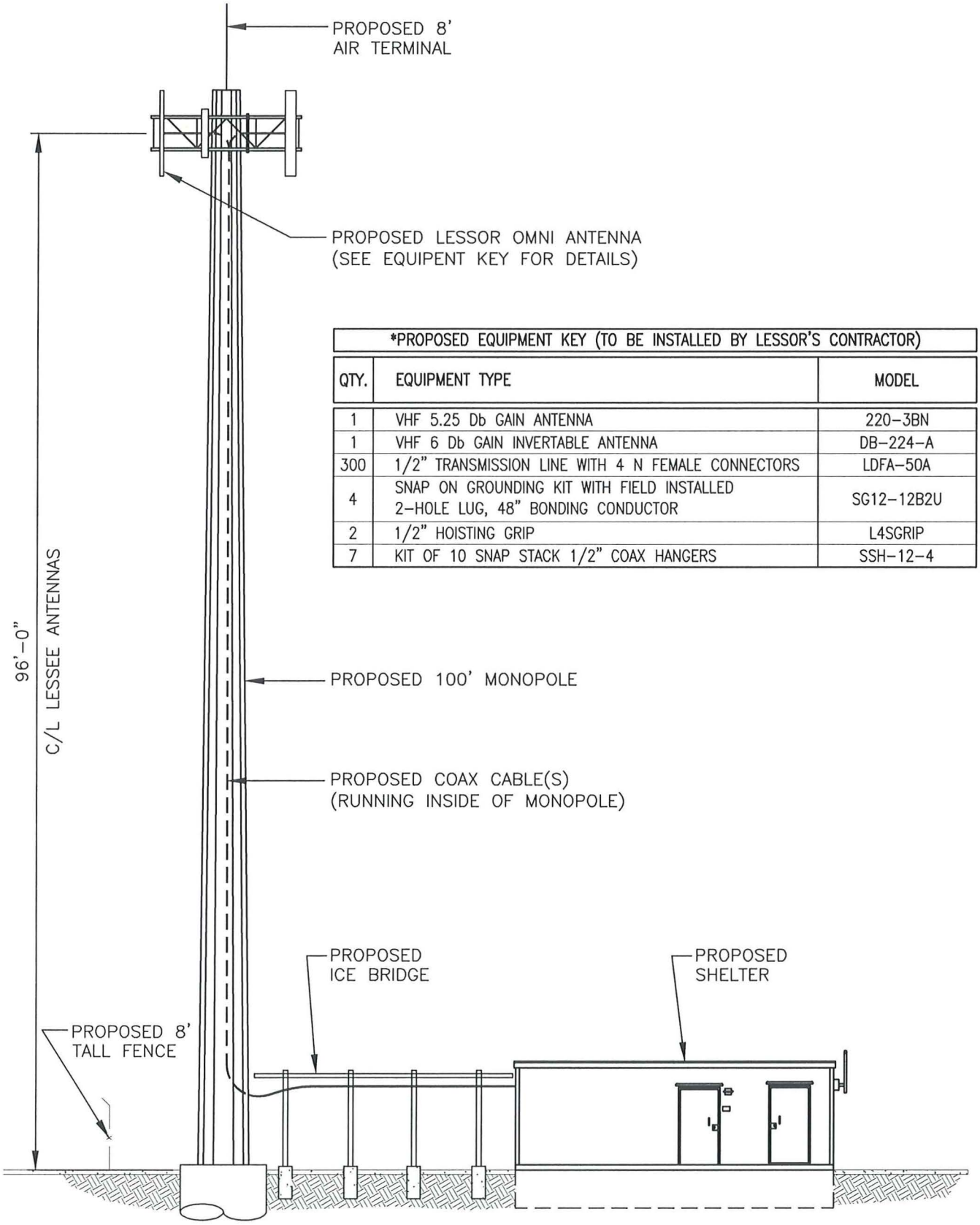

*PROPOSED EQUIPMENT KEY (TO BE INSTALLED BY LESSOR'S CONTRACTOR)

QTY.	EQUIPMENT TYPE	MODEL
1	VHF 5.25 Db GAIN ANTENNA	220-3BN
1	VHF 6 Db GAIN INVERTABLE ANTENNA	DB-224-A
300	1/2" TRANSMISSION LINE WITH 4 N FEMALE CONNECTORS	LDFA-50A
4	SNAP ON GROUNDING KIT WITH FIELD INSTALLED 2-HOLE LUG, 48" BONDING CONDUCTOR	SG12-12B2U
2	1/2" HOISTING GRIP	L4SGRIP
7	KIT OF 10 SNAP STACK 1/2" COAX HANGERS	SSH-12-4

MN07 LEON WILLMAR LEASE EXHIBIT

Exhibit D

Legal Description of Access and Utility Right-of-Way

ACCESS & UTILITY RIGHT OF WAY DESCRIPTION:

A 20.00 wide right of way for ingress, egress and utility purposes over, under and across Lots 8 and 9, Block 66, FIRST ADDITION TO TOWN OF WILLMAR, according to the recorded plat thereof, Kandiyohi County, Minnesota, the centerline of said right of way is described as follows:

> Commencing at the southwest corner of Lot 8 said Block 66; thence North 10 degrees 01 minutes 30 seconds West along the easterly right of way line of 2nd Street Southwest, a distance of 85.44 feet; thence North 79 degrees 58 minutes 30 seconds East, a distance of 73.74 feet; thence North 79 degrees 52 minutes 57 seconds East, a distance of 11.60 feet to the Point of Beginning of the centerline to be described; thence South 10 degrees 07 minutes 03 seconds East, a distance of 5.00 feet to a point hereinafter referred to as Point "A"; thence continue South 10 degrees 07 minutes 03 seconds East, a distance of 29.81 feet; thence South 79 degrees 52 minutes 57 seconds West, a distance of 85.49 feet to said easterly right of way line of 2nd Street Southwest and said centerline there terminating.

The sidelines of said right of way shall be shortened or lengthened to terminate at said easterly right of way line of 2nd Street Southwest.

TOGETHER WITH

A 10.00 foot wide right of way for ingress, egress and utility purposes over, under and across said Lots 8 and 9, the centerline of said right of way is described as follows:

> Beginning at previously described Point "A"; thence North 79 degrees 52 minutes 57 seconds East, a distance of 50.65 feet and said centerline there terminating.

TOGETHER WITH

A 10.00 wide right of way for utility purposes over, under and across Lots 9 and 10, Block 66, FIRST ADDITION TO TOWN OF WILLMAR, according to the recorded plat thereof, Kandiyohi County, Minnesota, the centerline of said right of way is described as follows:

> Commencing at the southwest corner of Lot 8 said Block 66; thence North 10 degrees 01 minutes 30 seconds West along the easterly right of way line of 2nd Street Southwest, a distance of 85.44 feet; thence North 79 degrees 58 minutes 30 seconds East, a distance of 73.74 feet; thence North 10 degrees 07 minutes 03 seconds West, a distance of 10.67 feet to the Point of Beginning of the centerline to be described; thence South 79 degrees 52 minutes 57 seconds West, a distance of 73.72 feet to said easterly right of way line of 2nd Street Southwest and said centerline there terminating.

The sidelines of said right of way shall be shortened or lengthened to terminate at said easterly right of way line of 2nd Street Southwest.

Exhibit E
Quit Claim Bill of Sale Form
QUIT CLAIM BILL OF SALE

FOR VALUABLE CONSIDERATION, _____ d/b/a Verizon Wireless, Seller, sells and conveys to _____, Buyer, the following personal property: Seller's tower (excluding its communications equipment, antennas, and coax)] ("Personal Property"), located at:

[Insert LEGAL DESCRIPTION or address of Property]

SELLER MAKES NO WARRANTY, EXPRESS OR IMPLIED, AS TO THE CONDITION OF THE PERSONAL PROPERTY OR ITS MERCHANTABILITY OR FITNESS FOR ANY PARTICULAR PURPOSE. BY ITS ACCEPTANCE OF THIS QUIT CLAIM BILL OF SALE, BUYER ACKNOWLEDGES THAT IT HAS FULLY INSPECTED THE PERSONAL PROPERTY AND BUYER ACCEPTS THE SAME "WHERE IS" AND IN ITS PRESENT USED AND "AS IS" CONDITION.

This Quit Claim Bill of Sale merely conveys to Buyer all right, title and interest, if any, of Seller in such Personal Property.

By its acceptance of this Quit Claim Bill of Sale, Buyer hereby assumes the full risk of any injuries, damages or loss related to the Personal Property except to the extent such liability is caused by Seller's gross negligence or intentional or willful acts and except for third-party injuries, damages or losses occurring prior to the execution of this Quit Claim Bill of Sale. Buyer hereby indemnifies and agrees to hold Seller harmless and forever releases, relieves, discharges and covenants not to sue Seller for any and all, claims, liabilities, demands, costs and expenses (including attorneys' fees), actions, proceedings, causes of action of any kind, known or unknown, claimed or concealed, based on any theory whatsoever, including claims arising out of Seller's negligence and except to the extent any claim is caused by Seller's gross negligence or intentional or willful acts, which Buyer or any third party has, ever had, or ever claims to have ever had or may have against Seller, which are related to the Personal Property conveyed hereunder and except for third-party injuries, damages or losses occurring prior to the execution of this Quit Claim Bill of Sale.

This Quit Claim Bill of Sale contains the entire agreement and representations of the parties related to the sale of the Personal Property, may not be altered except by a written instrument signed by both parties, and shall be construed in accordance with the laws of _____.

_____
d/b/a Verizon Wireless

DATE:_____

By:_____
Name:
Its: Area Vice President Network

CITY OF WILLMAR, MINNESOTA
REQUEST FOR COMMITTEE ACTION

Agenda Item Number: 5

Meeting Date: February 24, 2015

Attachments: ☒ Yes No

CITY COUNCIL ACTION

Date: March 2, 2015

☐ Approved ☐ Denied
☐ Amended ☐ Tabled
☐ Other

Originating Department: Civic Center

Agenda Item: Request to Purchase/Replace Rubber Flooring in the Civic Center

Recommended Action: Approve the purchase of the rubber flooring replacement in the Cardinal Arena and Blue Line Arena from All-American Arena Products.

Background/Summary: Quotes were solicited for the replacement and disposal of the rubber flooring in both arenas at the Civic Center. Two quotes were received; one from All-American Arena Products in the amount of $54,540.00, and from Arena Warehouse in the amount of $85,800.00. The quote from All-American Arena Products includes a credit for exchange of unused corrugated steel and screws at the Civic Center in the amount of $20,850.00.

Alternatives: 1. Replace the rubber flooring at a later date.
2. Do not replace the flooring.

Financial Considerations: The CIP includes $25,000 of unused funds for replacing cedar shakes at the Civic Center, $25,000 estimated in profits from the sale of the 1994 Zamboni and the remainder from unused HVAC funds.

Preparer: Sean E. Christensen, P.E.
Public Works Director

Signature:

Comments:

All-American Arena Products

PO Box 355
Alden, MN 56009

Estimate

Date	Estimate #
1/21/2015	28

Name / Address
Willmar Civic Center Troy Ciernia 2707 Arena Drive Willmar, MN 56201

Project

Description	Qty	U/M	Cost	Total
Regupol Aktiv 1000 (3/8") - Cardinal Arena	7,600	sq ft	1.90	14,440.00T
Regupol adhesive (5 gallon)	19	ea	140.00	2,660.00T
Flooring installation	7,500	ea	1.50	11,250.00T
Flooring installation (demo & dispose)	7,500	ea	1.50	11,250.00T
Estimate	1	ea	1,800.00	1,800.00T
Regupol Aktiv 1000 (3/8") - Blue Line Arena	6,100	sq ft	1.90	11,590.00T
Regupol adhesive (5 gallon)	15	ea	140.00	2,100.00T
Flooring installation	6,000	ea	1.50	9,000.00T
Flooring installation (demo)	6,000	ea	1.60	9,600.00T
Estimate	1	ea	1,700.00	1,700.00T
All-American will provide the demo and disposal of existing rubber flooring as quoted in exchange for all the corrugated steel and screws valued at $17,900.			-20,850.00	-20,850.00
~~ CHANGE ORDER ~~~~~ February 3, 2015 > Added 1 Demo credit. (-$20,850.00) Total change to estimate -$20,850.00 ~~~~~~~~~~~~~~~~~~~~~~~~~~				
~~ CHANGE ORDER ~~~~~ February 3, 2015 > Changed description of Demo credit. (+$0.00) Total change to estimate +$0.00 ~~~~~~~~~~~~~~~~~~~~~~~~~~				
Out-of-state sale, exempt from sales tax			0.00%	0.00

Total $54,540.00

Customer Signature ______________________

February 10, 2015

Willmar Civic Center

Willmar, MN

Dear Troy,

Based on your request, Arena Warehouse has put together the following pricing for your review.

Cardinal Arena

- Demo and dispose approximately 7600 sf
- Supply and install 3/8" x 48" wide rolls
    - Recycled rubber, black with 10% color fleck
    - Color to be determined
        - $46,150

Blue Line Arena

- Demo and dispose approximately 6100 sf
- Supply and install 3/8" x 48" wide rolls
    - Recycled rubber, black with 10% color fleck
    - Color to be determined
        - $39,650

**Applicable taxes and permit fees additional

Best regards,

Jeff Horstman

ARENA WAREHOUSE

ARENA WAREHOUSE

1661 Donway Ct. NE

Alexandria, MN 56308

CITY OF WILLMAR, MINNESOTA
REQUEST FOR COMMITTEE ACTION

Agenda Item Number: 6

Meeting Date: February 24, 2015

Attachments: ☒ Yes No

CITY COUNCIL ACTION

Date: March 2, 2015

☐ Approved ☐ Denied
☐ Amended ☐ Tabled
☐ Other

Originating Department: Public Works

Agenda Item: Sign Retroreflectivity Policy Change

Recommended Action: To adopt the changes to the Sign Retroreflectivity Policy

Background/Summary: The purpose of the Sign Retroreflectivity Policy is to establish how the City will implement a method to meet the minimum sign retroreflectivity requirements in the Manual on Uniform Traffic Control Devices. The goal of this policy is to improve public safety on the City's streets and maximize the City's limited resources to replace signs and was adopted on June 16, 2014 by the City Council. The proposed changes include removal of a portion of the Sign Inventory section detailing the type, location, and maintenance of the signs and adding in a Blanket Replacement giving the City an interval of twelve years to replace existing signs.

Alternatives: Do not adopt the policy changes.

Financial Considerations: None at this time

Preparer: Sean E. Christensen, P.E.
Public Works Director

Signature:

Comments:

City of Willmar, Minnesota
Sign Retroreflectivity Policy

Article I. Purpose and Goal.

The purpose of this policy is to establish how the city will implement an assessment or management method, or combination of methods, to meet the minimum sign retroreflectivity requirements in the Minnesota Manual on Uniform Traffic Control Devices (MN MUTCD).

Substantial conformance with the MN MUTCD is achieved by having a method in place to maintain minimum retroreflectivity levels. Conformance does not require or guarantee that every individual sign in the city will meet or exceed the minimum retroreflective levels at every point in time.

The goal of this policy is to improve public safety on the city's streets and roads and prioritize the city's limited resources to replace signs.

Article II. Applicable Signs.

This policy applies to all regulatory, warning, and guide signs as set forth in the MN MUTCD.

[Pursuant to Section 2A.8 of the MN MUTCD the city excludes the following signs from the retroreflectivity maintenance guidelines:

A. Parking, Standing, and Stopping signs (R7 and R8 series)
B. Walking/Hitchhiking/Crossing signs (R9 series, R10-1 through R10-4b)
C. Acknowledgment signs, including Memorial signs
D. All signs with blue or brown backgrounds
E. Bikeway signs that are intended for exclusive use by bicyclists or pedestrians]

Article III. Resource Materials

The city has reviewed and relied on numerous resources in adopting this policy. These resource materials include, but are not limited to the following:

- *Methods for Maintaining Traffic Sign Retroreflectivity*, Publication No. FHWA-HRT-08-026, U.S. Department of Transportation, Federal Highway Administration (November 2007).

- *Sign Retroreflectivity Guidebook*, Publication No. FHWA-CFL/TD-09-005, U.S. Department of Transportation, Federal Highway Administration (September 2009).

- *Sign Retroreflectivity: A Minnesota Toolkit*, Minnesota Department of Transportation, Local Road Research Board (June 2010).

- *Traffic Sign Maintenance/Management Handbook*, Report No. 2010RIC10, Version 1.1, Minnesota Department of Transportation (October 2010).

- *LMCIT Sign Retroreflectivity Memo and Model Policy*, League of Minnesota Cities (Final Edition, March 2014).

Article IV. Sign Inventory

To meet the city's goal of maintaining sign retroreflectivity above certain levels, the city will maintain sign records of all new or replacement signs installed after the effective date of this policy. ~~The inventory shall indicate the type of sign, the location of the sign, the date of installation or replacement, the type of sheeting material used on the sign face, the expected life of the sign, and any maintenance performed on the sign.~~

~~As to existing signs, the city will perform an inventory of all signs covered by this policy. The city recognizes this process will occur over time subject to the city's monetary and human resources. The city expects to complete its sign inventory by January, 2015. The city shall record the above information related to new signs to the extent that such information is known and shall also include a statement on the general condition of the sign.~~

Article V. Removal of Signs

In recognition of the fact that excess road signs have been shown to reduce the effectiveness of signage, as well as impose an unnecessary financial burden on road authorities, it is the city's policy to remove signs determined to be unnecessary for safety purposes and which are not required to comply with an applicable state or federal statute or regulation. The removal of signs shall be based on an engineering study and the MN MUTCD.

Article VI. Approved Sign Evaluation Method.

After reviewing the various methods proposed for sign maintenance, the City adopts one or more of the following methods to meet the minimum sign retroreflectivity requirements in the MN MUTCD:

☒ **Nighttime Visual Inspection.** The retroreflectivity of the City's signs is assessed by a trained sign inspector following a formal visual inspection procedure from a moving vehicle during nighttime conditions. Signs that are visually identified by the inspector to have retroreflectivity below the minimum levels will be replaced. The City will visually inspect its signs based on the following schedule:

The City will visually inspect all of the signs covered by this policy once each year.

☒ **Expected Sign Life.** The installation date is labeled or recorded when a sign is installed, so that the age of any given sign is known. The age of the sign is compared to the expected sign life. The expected sign life is based on the experience of sign retroreflectivity degradation in the City. Signs older than the expected life will be replaced.

☒ **Blanket Replacement.** All signs in the City of a given type are replaced at specified intervals. This eliminates the need to assess retroreflectivity or track the life of individual signs. The replacement interval is based on the expected sign life for the shortest-life material used in the City or a given sign type. The current replacement interval is twelve years.

Article VII. Sign Replacement.

The City hereby establishes the following priority order in which road signs will be replaced:

- First priority shall be given to replacing all signs determined not to meet applicable retroreflectivity standards. Top priority shall also be given to replacing missing or damaged signs determined to be of a priority for safety purposes.
- Second priority shall be given to signs determined to be marginal in their retroreflectivity evaluation.
- Third priority shall be given to all remaining signs as they come to the end of their anticipated service life, become damaged, etc.

In addition, within each category above, further priority shall be given to warning and regulatory signs on roads with higher vehicle usage.

After the initial replacement of signs as provided for in this Article or the installation of new signs, the City shall, for the purpose of complying with the requirements of the MN MUTCD, maintain minimum retroreflectivity standards, as budgetary factors allow, by replacing signs as they reach the end of the latter of their (a) warranty period; (b) expected life expectancy for the sheeting material used on the sign; or (c) expected life as determined by an authorized engineering study.

Damaged, stolen, or missing signs may be replaced as needed.

Article VIII. Modification and Deviation from Policy.

The City reserves the right to modify this Sign Retroreflectivity Policy at any time if deemed to be in the best interests of the City based on safety, social, political and economic considerations.

The Director of Public Works, or his or her designee, may authorize a deviation from the implementation of this policy in regard to a particular sign when deemed to be in the best interests of the City based on safety, social, political and economic considerations. Such deviation shall be documented including the reason for the deviation and other information supporting the deviation.

Adopted by the City Council of the City of _____ on this _____ day of _____, 2014.

_____
City Clerk

_____
Mayor

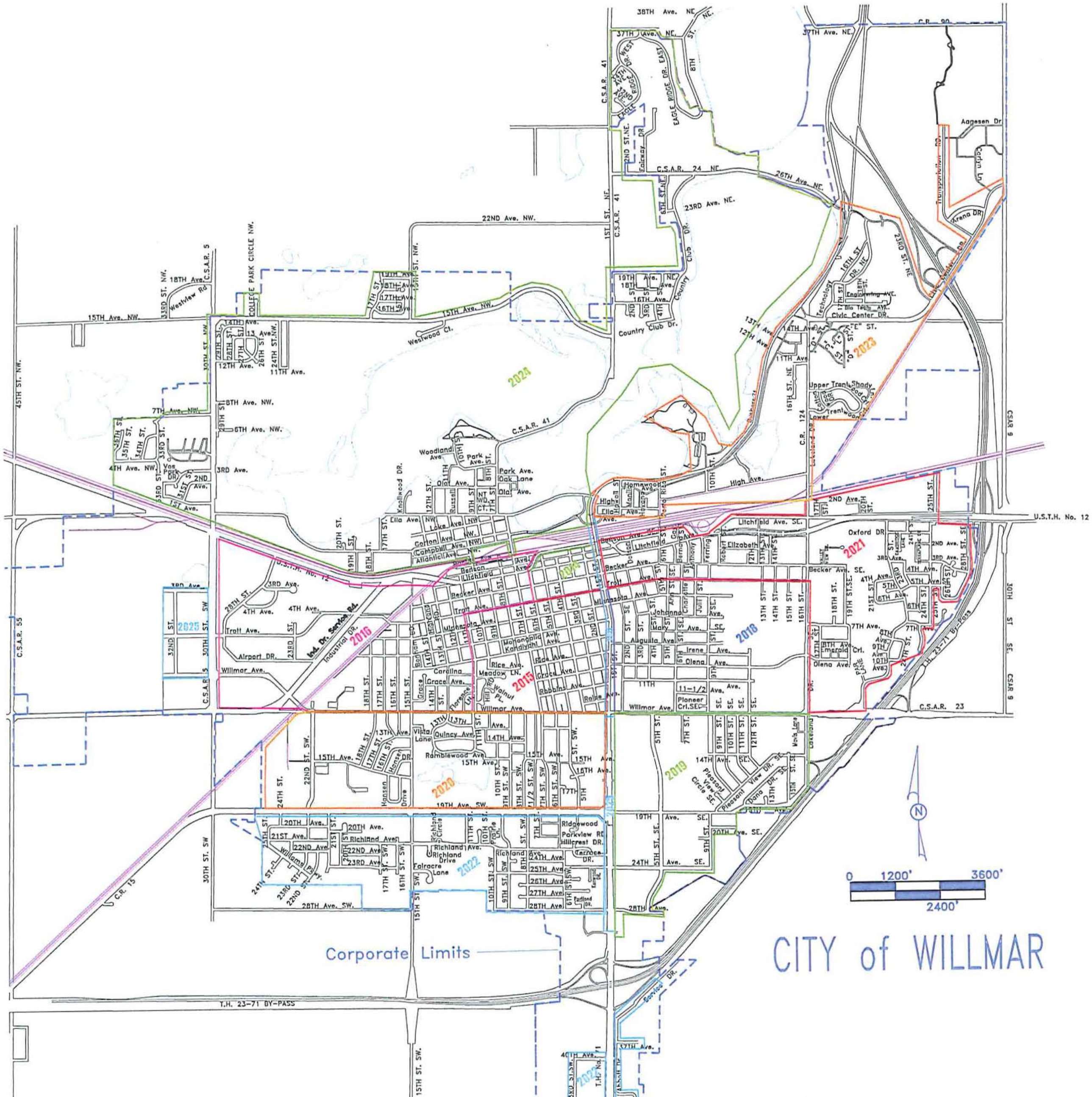
CITY of WILLMAR
Corporate Limits
0
1200'
2400'
3600'
N
2010
2015
2016
2018
2019
2020
2021
2022
2023
2024
2025
U.S.T.H. No. 12
T.H. 23-71 BY-PASS
CSAR 9
C.S.A.R. 41
C.S.A.R. 24 NE.
C.S.A.R. 5
C.S.A.R. 55
C.S.A.R. 23
C.R. 15
C.R. 124
C.R. 90
45TH ST. NW.
30TH ST. SE.
15TH ST. SW.
1ST ST. NE.

CITY OF WILLMAR, MINNESOTA
REQUEST FOR COMMITTEE ACTION

Agenda Item Number: 7

Meeting Date: February 24, 2015

Attachments: ☒ Yes No

CITY COUNCIL ACTION

Date: March 2, 2015

☐ Approved ☐ Denied
☐ Amended ☐ Tabled
☐ Other

Originating Department: Public Works

Agenda Item: Request to Purchase/Replace Four Kubota Mowers

Recommended Action: Approve the purchase/replacement of four Kubota mowers

Background/Summary: Staff is requesting replacement of four 2011 Kubota mowers in accordance with the 2015 Capital Outlay Program. The new Kubota mowers are to be purchased from Haug Kubota Implement through the National Joint Powers Alliance in the total amount of $72,695.00. Two units are Model F3900 mowers with cabs for $51,113.00, one unit is a ZD331LP-72 mower for $10,480.00, and one unit is a B3350HSD mower/compact tractor for $11,082.00. Haug Kubota has given us a very positive trade value allowance and is reflected in the prices. The current mower units are used frequently throughout the summer and winter months and are showing signs of mechanical issues and metal fatigue.

Alternatives: Keep the current mowers.

Financial Considerations: The 2015 Capital Outlay Program has included $127,628.00 for the purchase and replacement of the mowers.

Preparer: Sean E. Christensen, P.E.
Public Works Director

Signature:

Comments: Vehicle/Equipment Replacement Policy objective is to reduce annual maintenance and replacement costs of all City equipment. These objectives will be met through the systematic maintenance, upgrade, and/or replacement of equipment.

WILLMAR

PUBLIC WORKS

DIRECTOR/CITY ENGINEER
City Office Building
Box 755 320-235-4202
STREET/PARK SUPERINTENDENT
801 W. Hwy. 40 320-235-3827
WASTEWATER TREATMENT
3000 75th St. SW 320-235-4760
Willmar, Minnesota 56201
Fax 320-235-4917
www.ci.willmar.mn.us

Memorandum

TO: Charlene Stevens, City Administrator

FROM: Sean Christensen, Public Works Director

DATE: February 17, 2015

RE: Purchase of Mowers

Staff is in the process of proceeding with the purchase and replacement of four Kubota Mowers in accordance with the 2015 Capital Outlay Program.

I am requesting approval to replace four mower units; all four are 2011 Kubota Mowers, mower units # 115645, 115469, 115465, 113803. Please be advised that the 2015 Capital Outlay Program has included $127,628.00 for the replacement of four (4) mowers. The Kubota Mowers would be purchase from Haug Kubota Implement through the National Joint Powers Alliance. Two are model F 3990 mowers with cabs for $51,113.00, one is model ZD331LP-72 mower for $10,480.00 and the last is model B3350HSD Mower/Compact Tractor for $11,082, for a total of $72,695.00, this price includes mower decks and attachments.

Please be advised that we received a very positive trade value allowance and that amount is reflected in the prices. Also be advised unit # 115465 is a front mount mower to be replaced with a Compact Mower/Tractor.

Please let me know if you concur with this submittal.

Approval_____

gm

Willmar
All-America City
2005

Form E

Contract Acceptance and Award

(To be completed only by NJPA)

NJPA 070313 GROUNDS MAINTENANCE WITH RELATED EQUIPMENT, ACCESSORIES AND SUPPLIES

Proposer's full legal name Kubota Tractor Corporation

Your proposal is hereby accepted and awarded. As an awarded Proposer, you are now bound to provide the defined product/equipment and services contained in your proposal offering according to all terms, conditions, and pricing set forth in this RFP, any amendments to this RFP, your Response, and any exceptions accepted or rejected by NJPA on Form C.

The effective date of the Contract will be September 11, 20 13 and continue for four years thereafter AND which is subject to annual renewal at the option of both parties. This contract has the consideration of an optional fifth year renewal option at the discretion NJPA.

National Joint Powers Alliance® (NJPA)

NJPA Authorized signature: _____ Chad Crouette

NJPA Executive Director (Name printed or typed)

Awarded this 20th day of August 20 13 **NJPA Contract Number # 070313** - KBA

NJPA Authorized signature: Scott Vernon Scott Vernon

NJPA Board Member (Name printed or typed)

Executed this 20th day of August 20 13 **NJPA Contract Number # 070313** -KBA

Proposer hereby accepts contract award including all accepted exceptions and NJPA clarifications identified on FORM C.

Vendor Name: Kubota Tractor Corporation

Vendor Authorized signature: Greg Embury

Greg Embury

(Name printed or typed)

Executed this 20th day of August 20 13 **NJPA Contract Number # 070313** -KBA

ANNUAL RENEWAL OF AGREEMENT

Made by and Between

Kubota Tractor Corporation (Vendor)
3401 Del Amo Blvd.
Torrance, CA 90503

and

National Joint Powers Alliance® (NJPA)
202 12th Street NE
Staples, MN 56479
Phone: (218) 894-1930

Whereas:

"Vendor" and "NJPA" have entered into an "Acceptance and Award #070313-KBA" for the procurement of Grounds Maintenance with Related Equipment, Accessories and Supplies, and having a maturity date of August 20, 2017, and which are subject to annual renewals at the option of both parties.

Now therefore:

"Vendor" and "NJPA" hereby desire and agree to extend and renew the above defined contract for the period of September 11, 2014 to September 11, 2015.

National Joint Powers Alliance® (NJPA)

By: _____, Its: Executive Director/CEO

Name printed or typed: Chad Coauette

Date 8/13/14

Kubota Tractor Corporation

By: _____, Its: National Accts Business Development Mgr

Name printed or typed: Mark White

Date 8/12/14

If you do not desire to extend contract, please sign below and return this agreement.
Discontinue: We desire to discontinue the contract.

Signature: _____ Date: _____

FORM D Formal Offering of Proposal (To be completed Only by Proposer)

GROUNDS MAINTENANCE WITH RELATED EQUIPMENT, ACCESSORIES AND SUPPLIES,

In compliance with the Request for proposal (RFP) for "GROUNDS MAINTENANCE WITH RELATED EQUIPMENT, ACCESSORIES AND SUPPLIES", the undersigned warrants that I/we have examined this RFP and, being familiar with all of the instructions, terms and conditions, general specifications, expectations, technical specifications, service expectations and any special terms, do hereby propose, fully commit and agree to furnish the defined equipment/products and related services in full compliance with all terms, conditions of this RFP, any applicable amendments of this RFP, and all Proposer's Response documentation. Proposer further understands they accept the full responsibility as the sole source of responsibility of the proposed response herein and that the performance of any sub-contractors employed by the Proposer in fulfillment of this proposal is the sole responsibility of the Proposer.

Company Name: Kubota Tractor Corporation Date: 6/19/2013

Company Address: 3401 Del Amo Blvd.

City: Torrance State: CA Zip: 90503

Contact Person: Tim L. Bauer Title: National Accounts Manager

Authorized Signature (ink Only) Tim L. Bauer Tim L. Bauer Tim L. Bauer

6/20/2013

HAUG-KUBOTA

3585 HWY 12 E
PO BOX 1156
WILLMAR, MN 56201
320-235-2717
320-235-2771 FAX

DATE: FEB. 9th 2015

CUSTOMER: CITY OF WILLMAR

MAKE: Kubota

MODEL: F3990 Front Mount Mower

SPECIFICATIONS: 39 HP, 4 CYL. Kubota Diesel Engine, 2 Range Hydro Transmission, 4WD, Front Differential Lock, Tilt Steering Column, Power Steering, Deluxe Suspension Seat, 2 Point Hitch Lift, Hyd. Multi-Disc PTO, 16 Gal Fuel Tank, LCD Display Panel, 2 Post Foldable ROPS, Operator Presence Control, Parking Brake, Tires = 24 x 12-12 Fronts, 18 x9.5 Rear Turfs RCK72R-F36- 72" Rear Discharge Mower Deck, 3 Blade, Shaft Driven, Quick Mount Mechanism

ADDITIONAL OPTIONS: L2163 - New Kubota 60" Front Mount Rotary Sweeper, Hyd. Angle Kit, Front 1/2 PTO kit, Quick Hitch, Subframe, (2) Hyd. Valve and Hose Kits, Rear wt. Bracket, (4) 55lb. suitcase wts.

JDP Hard Sided Cab, with Heat, Front and Rear Wipers, 4-Way Flashers/Signals, Front and Rear Work Lts. Console Mounted directional Louvers, Defroster Fan, Internal Rear View Mirror

LIST PRICE:.....$41,735.00
LESS NJPA DISCOUNT.....$<6646.00>
FRT AND SETUP.....$2,300.00
SALE PRICE:.....$37,389.00

TRADE-IN(S): 2011 Kubota F3680 Front Mount with Cab,
SN = 15469, 72" mower.....$<13,146.00>

TRADE DIFFERENCE.....$24,243.00
SALES TAX:.....$ NONE

TRADE DIFFERENCE WITH SALES TAX:.....$24,243.00

PREPARED BY JON ZASKE

HAUG-KUBOTA

3585 HWY 12 E
PO BOX 1156
WILLMAR, MN 56201
320-235-2717
320-235-2771 FAX

DATE: FEB. 9th 2015

CUSTOMER: CITY OF WILLMAR

MAKE: Kubota
MODEL: F3990 Front Mount Mower

SPECIFICATIONS: 39 HP, 4 CYL. Kubota Diesel Engine, 2 Range Hydro Transmission, 4WD, Front Differential Lock, Tilt Steering Column, Power Steering, Deluxe Suspension Seat, 2 Point Hitch Lift, Hyd. Multi-Disc PTO, 16 Gal Fuel Tank, LCD Display Panel, 2 Post Foldable ROPS, Operator Presence Control, Parking Brake, Tires = 24 x 12-12 Fronts, 18 x9.5 Rear Turfs RCK72R-F36- 72" Rear Discharge Mower Deck, 3 Blade, Shaft Driven, Quick Mount Mechanism

ADDITIONAL OPTIONS: F5220B - New Kubota 51" Front Mount Snow Blower, Quick Hitch, Subframe, Hyd. Chute Rotator, (2) Hyd. Valve and Hose Kits, Rear Wt. Bracket, (4) 55 lb. Suitcase Wts.
L2163 - New Kubota 60" Front Mount Rotary Sweeper, Hyd. Angle Kit, Front 1/2 PTO kit, (utilize same quick hitch, subframe and Hyd. valve kits as above)

JDP Hard Sided Cab, with Heat, Front and Rear Wipers, 4-Way Flashers/Signals, Front and Rear Work Lts. Console Mounted directional Louvers, Defroster Fan, Internal Rear View Mirror

LIST PRICE:.....$46,757.00
LESS NJPA DISCOUNT.....$<7650.00>
FRT AND SETUP.....$2,450.00
SALE PRICE:.....$41,557.00

TRADE-IN(S): 2011 Kubota F3680 Front Mount with Cab,
SN = 15645, 72" mower, 51" snow blower SN = 21105243.....$<14,666.00>

TRADE DIFFERENCE.....$26,890.00
SALES TAX:.....$ NONE

TRADE DIFFERENCE WITH SALES TAX:.....$26,890.00

PREPARED BY JON ZASKE

VEHICLE/EQUIPMENT CHANGE REQUEST FORM

1970 HRS

BB ***Department Head*** - I am requesting the following to occur:

				Check Applicable Box
Addition - *(To the overall number of vehicles in our fleet)*:				
Deletion - *(From the overall number of vehicles in our fleet and not to be replaced)*:				
Replacement - *(To be replaced by another vehicle)*:				2015
Replacement Adjustment - *(Move a budgeted vehicle to a different year in the schedule)*				
Re-assignment - *(Transfer to another City Dept.)*:				
Fixed Asset Number:	3007.00031			*Reminder to Attach Photo*
Vehicle Number:	115469	Replacement Cost:	$31,907.00	

Kubota mower

(Comments): Mower unit is used during summer and winter activities. Engine is a concern for the future. Should be replaced.

Initial J.L.

Operator or Supervisor *(comments if applicable)*:

Engine really struggles when the machine is first started, Lots of misses. Winter cab has issues with fumes (sometimes) and heat inside cab has periodically been and issue. Blower has ~~had~~ been worked hard and I expect it will need more work as time goes on. Initial J.D.

(X) ***Mechanic*** *(comments if applicable)*:

1448 - hrs. Engine has slight miss on cold start-up. Deck has had frame repair. Expecting more repairs as unit ages.

Initial MDS 1/10/14

X ***APPROVED*** ____ ***DENIED*** ***Vehicle/Equipment Committee*** D. Wyffels 02/19/14 ***Date***

X ***APPROVED*** ____ ***DENIED*** [signature] *City Administrator* 4-10-14 *Date*

This document was last reviewed and approved on April 18, 2013

KUBOTA MOWER # 115469 1450 HRS

VEHICLE/EQUIPMENT CHANGE REQUEST FORM

1570 HRS

Department Head - I am requesting the following to occur:

Check Applicable Box

Addition - *(To the overall number of vehicles in our fleet)*:			
Deletion - *(From the overall number of vehicles in our fleet and not to be replaced)*:			
Replacement - *(To be replaced by another vehicle)*:			2015
Replacement Adjustment - *(Move a budgeted vehicle to a different year in the schedule)*			
Re-assignment - *(Transfer to another City Dept.)*:			
Fixed Asset Number:	3007.00030		*Reminder to Attach Photo*
Vehicle Number:	115645	Replacement Cost:	$ 31,907.00

Kubota mower

(Comments): This unit is showing signs of wear in the deck and frame areas. The unit is used in summer and winter activities. Should be replaced as per schedule.

Initial

Operator or Supervisor *(comments if applicable)*:

Some issues with cold start. Lots of ~~spatter~~ sputtering. Push blade does a good job of moving snow. Machine gets a lot of use in both summer and winter. Should be replaced as scheduled.

Initial

Mechanic *(comments if applicable)*:

12-12 hrs Tie rod end for steering keeps loosening in frame end. Rear axle assembly has been run loose from frame. Mounts have been repaired - damage to axle assembly not sure of.

Initial MDS 1/10/14

X ***APPROVED***	***DENIED***	***Vehicle/Equipment Committee*** D. Wyffels	02-19-14 ***Date***
X ***APPROVED***	***DENIED***	*City Administrator*	4-10-14 ***Date***

This document was last reviewed and approved on April 18, 2013

KUBOTA MOWER #115645 1212 HRS

3585 HWY 12 E
PO BOX 1156
WILLMAR, MN 56201
320-235-2717
320-235-2771 FAX

DATE: FEB 9th 2015

CUSTOMER: CITY OF WILLMAR

MAKE: KUBOTA
MODEL: ZD331LP-72 Zero Turn Mower

SPECIFICATIONS: 31 HP Kubota Diesel Zero Turn Mower, 3 Cyl. Kubota Diesel Engine, Twin Lever Hydrostatic Transmissions, 12.9 Gal. Fuel Tank, Hyd. Independent PTO, Wet Clutch, Shaft Driven Mower Deck, Deluxe Suspension Seat, Adj. Front Axel; Rigid/Oscillating, Hands Free Hyd. Deck Lift, Hands Free Parking Brake, Foldable ROPS,
72" PRO Commercial Deck, 7 Gauge, 6.5" Deep, 1-5" Cutting Heights, 1/4" Increments, Right Hand Discharge, 3 Blades,
Tires = Rears - 26 x 12-12 Turf, Fronts = 15 x 6.0-6 Flat Free

ADDITIONAL OPTIONS: GCK72H-300Z , 11.4 Bu. Hopper Style Grass Catcher, With Blower and Mounting Kit, Wt. Kit,

LIST PRICE:.....$21,085.00
LESS NJPA DISCOUNT.....$<4,217.00>
Plus Frt. And Set Up.....$550.00

SALE PRICE:.....$17,418.00

TRADE-IN(S): 2011 Kubota ZD331LP-72,.. SN-33803.....$<6,938.00>

TRADE DIFFERENCE.....$10,480.00
SALES TAX:.....$ NONE
\
TRADE DIFFERENCE WITH SALES TAX:.....$10,480.00

NOTES:

PREPARED BY JON ZASKE

VEHICLE/EQUIPMENT CHANGE REQUEST FORM

886 HRS

Department Head - I am requesting the following to occur:

				Check Applicable Box
Addition - *(To the overall number of vehicles in our fleet)*:				
Deletion - *(From the overall number of vehicles in our fleet and not to be replaced)*:				
Replacement - *(To be replaced by another vehicle)*:				2015
Replacement Adjustment - *(Move a budgeted vehicle to a different year in the schedule)*				
Re-assignment - *(Transfer to another City Dept.)*:				
Fixed Asset Number:	3007.00028			*Reminder to Attach Photo*
Vehicle Number:	113803	Replacement Cost:	$31,907.00	

Kubota mower

(Comments): This mower is used on ballfields. Striping kit is in need of replacement. Replace as in schedule

Initial S.S.

Operator or Supervisor *(comments if applicable)*:

~~Big Wheel~~ Wheels are wore out, showing signs of wear. Problems with Striping Kit. Lot of HRS

Initial KW 1-13-14

Mechanic *(comments if applicable)*:

654-hrs mower unit has been good. Striping kit has been a problem and has had major changes done to it.

Initial MDS 1/10/14

X ***APPROVED*** ____ ***DENIED*** ***Vehicle/Equipment Committee*** D. Wyffels 02-19-14 ***Date***

X ***APPROVED*** ____ ***DENIED*** [signature] *City Administrator* 4-11-14 *Date*

This document was last reviewed and approved on April 18, 2013

Kubota Mower # 113803 654 HRS

3585 HWY 12 E
PO BOX 1156
WILLMAR, MN 56201
320-235-2717
320-235-2771 FAX

DATE: Feb 9th 2015

CUSTOMER:CITY OF WILLMAR

MAKE: KUBOTA
MODEL: B3350HSD COMPACT MOWER/TRACTOR

SPECIFICATIONS: 33 HP, 4 Cyl. Kubota Diesel Engine, Open Center Hydraulics, 4WD, 3 Range Hydrostatic Transmission, Rear Diff. Lock, Cat I 3 pt. Hitch, 7 Gal. Fuel Tank, Live Independent Hydraulic 540 Rear PTO, Foldable ROPS with Retractable Seat Belt, Turn Signals/Hazard Lights, Tilt Steering Column, Power Steering, Adjustable Suspension Seat with Arm Rests, Telescoping Stabilizers, Cat I Quick Hitch, Front Wt. Bracket, (5) 55 lb. wts.
Turf Tires - Front =24 x 8.5-14, Rear = 13.6 x 16 Turfs,

ADDITIONAL OPTIONS: New Kubota RC72-30B Mid Mount Mower, 72" Cutting Width, Shaft Driven, Right Hand Discharge, Parallel Linkage, Quick Mount Mechanism

Land Pride CA1572 Core Aerator, Cat. I 3 Pt. Mount, 72" Working Width, 1/2" Hardened Steel Spoons, 3-4 1/2" Spoon Penetration, 3 Support Stands, Greaseable Gang Assembly, 1/2" Plug Size

LIST PRICE:.....$27,658.00
LESS NJPA DISCOUNT.....$<5,080.00>
PLUS FRT AND SETUP.....$650.00
SALE PRICE:.....$23,228.00

TRADE-IN(S): 2011 Kubota F3680 Front Mount Mower SN - 15465,
72" rear discharge mower deck,
L2162 front mount Sweeper SN - 21100190.....$<12,146.00>

SALES TAX:.....$NONE
TRADE DIFFERENCE WITH SALES TAX:.....$11,082.00

PREPARED BY JON ZASKE

VEHICLE/EQUIPMENT CHANGE REQUEST FORM

1503 HRS

Department Head - I am requesting the following to occur:

Check Applicable Box

Addition - *(To the overall number of vehicles in our fleet)*:			
Deletion - *(From the overall number of vehicles in our fleet and not to be replaced)*:			
Replacement - *(To be replaced by another vehicle)*:			2015
Replacement Adjustment - *(Move a budgeted vehicle to a different year in the schedule)*			
Re-assignment - *(Transfer to another City Dept.)*:			
Fixed Asset Number:	300700029		*Reminder to Attach Photo*
Vehicle Number:	115465	Replacement Cost:	$31,907.00

Kubota mower

(Comments): Mower has heavy use during summer mowing. Has shown signs of metal fatigue in deck area. Should be replaced as scheduled

Initial d.P.

Operator or Supervisor *(comments if applicable)*:

This mower gets heavy use in the summer mowing months. The deck shows a lot of wear from constant use in the parks. Some denting on the engine hood. ~~[illegible]~~. Lots of road time driving to and from parks.

Initial

Mechanic *(comments if applicable)*:

1114 - hrs. Lift arms are wearing. Mower Deck is slightly twisted. Am expecting other issues to start showing up. Has been run with rear axle oil gauge/plug missing.

Initial MDS 1/10/14

X ***APPROVED*** ____ ***DENIED*** ***Vehicle/Equipment Committee*** D. Wyffels 02-19-14 ***Date***

X ***APPROVED*** ____ ***DENIED*** *City Administrator* 4-10-14 ***Date***

This document was last reviewed and approved on April 18, 2013

KUBOTA MOWER # 115465 1114 HRS

CITY OF WILLMAR, MINNESOTA
REQUEST FOR COMMITTEE ACTION

Agenda Item Number: 8

Meeting Date: February 24, 2015

Attachments: Yes ☒ No

CITY COUNCIL ACTION

Date: March 2, 2015

☐ Approved ☐ Denied
☐ Amended ☐ Tabled
☐ Other

Originating Department: Public Works

Agenda Item: Welcome to Willmar Sign Update

Recommended Action: Staff recommends replacing the sign to original design

Background/Summary: The original Welcome to Willmar sign was demolished in an accident in May of 2014, when a car ran off the side of Highway 71 and struck the sign. Quotes were solicited for the replacement of the sign, with one quote received from Quick Signs of Willmar. The quote details replacing the sign on the existing pad as it was originally constructed.

Alternatives:
1. Replace sign to match what was there originally
2. Replace sign with a full digital sign

Financial Considerations: Nothing was budgeted for this item. Insurance will pay no more than the cost to replace the sign as it currently existed. We have submitted the quote to the insurance company and anticipate a check for that replacement.

Preparer: Sean E. Christensen, P.E.
Public Works Director

Signature:

Comments: The logistics of converting to a full digital sign make it difficult to recommend. It is not completely obvious if there will be the required amount of power available to the site. The programming of the sign requires an employee physically at the sign location. The cost of the digital sign is almost three times the cost to replace what was there originally.

Print Masters Of Willmar
design.copy.print

919 First Street S • Willmar, MN 56201
Phone 320-235-8055 • Phone 320-235-7411
PrintMastersofWillmar.com • QuickSignsofWillmar.com

Quicksigns Of Willmar
Signs • Vehicle Graphics • Apparel • Promotional Items

Estimate

DATE	ESTIMATE NO.
1/12/2015	912

NAME / ADDRESS

City of Willmar
City Office Building
Willmar, MN 56201

DESCRIPTION	QTY	TOTAL
LIghted 4' x 8' Single-sided Extruded Aluminum Cabinet Sign With Routed Face and Vinyl Graphics Includes sign, delivery and installation. Does not include electrical work, permit fees or sales tax if applicable.	1	3,969.00
Masonry Work - Block Monument Base On Existing Pad Includes 16" x 16" x 8" colored rock-faced blocks and 16" x 16" x 4" colored rock-faced caps to match existing monument bases.	1	2,600.00
TOTAL COST OF MONUMENT BASE, SIGN AND INSTALLATION	1	6,569.00

Phone #	Fax #	E-mail	Web Site
320-235-8055...	320-235-7149	print@printmastersofwillmar...	PrintMastersofWillmar.co...

Print Masters Of Willmar
design.copy.print

919 First Street S • Willmar, MN 56201
Phone 320-235-8055 • Phone 320-235-7411
PrintMastersofWillmar.com • QuickSignsofWillmar.com

Quicksigns Of Willmar
Signs • Vehicle Graphics • Apparel • Promotional Items

Estimate

DATE	ESTIMATE NO.
2/17/2015	917

NAME / ADDRESS

City of Willmar
City Office Building
Willmar, MN 56201

DESCRIPTION	QTY	TOTAL
Daktronics 3550 Series Single-sided Full Color Digital Sign - 46" x 94" Includes sign, wireless communications (1500' range), temp sensor, software, installation and training. Does not include electrical work, permit fees or sales tax if applicable.	1	14,860.00
Masonry Work - Block Monument Base On Existing Pad Includes 16" x 16" x 8" colored rock-faced blocks and 16" x 16" x 4" colored rock-faced caps to match existing monument bases	1	2,600.00
TOTAL COST OF SIGN, MONUMENT BASE AND INSTALLATION AND TRAINING	1	17,460.00

Phone #	Fax #	E-mail	Web Site
320-235-8055...	320-235-7149	print@printmastersofwillmar...	PrintMastersofWillmar.co...